REVISIONS			
REV	DESCRIPTION	DATE	APP'D

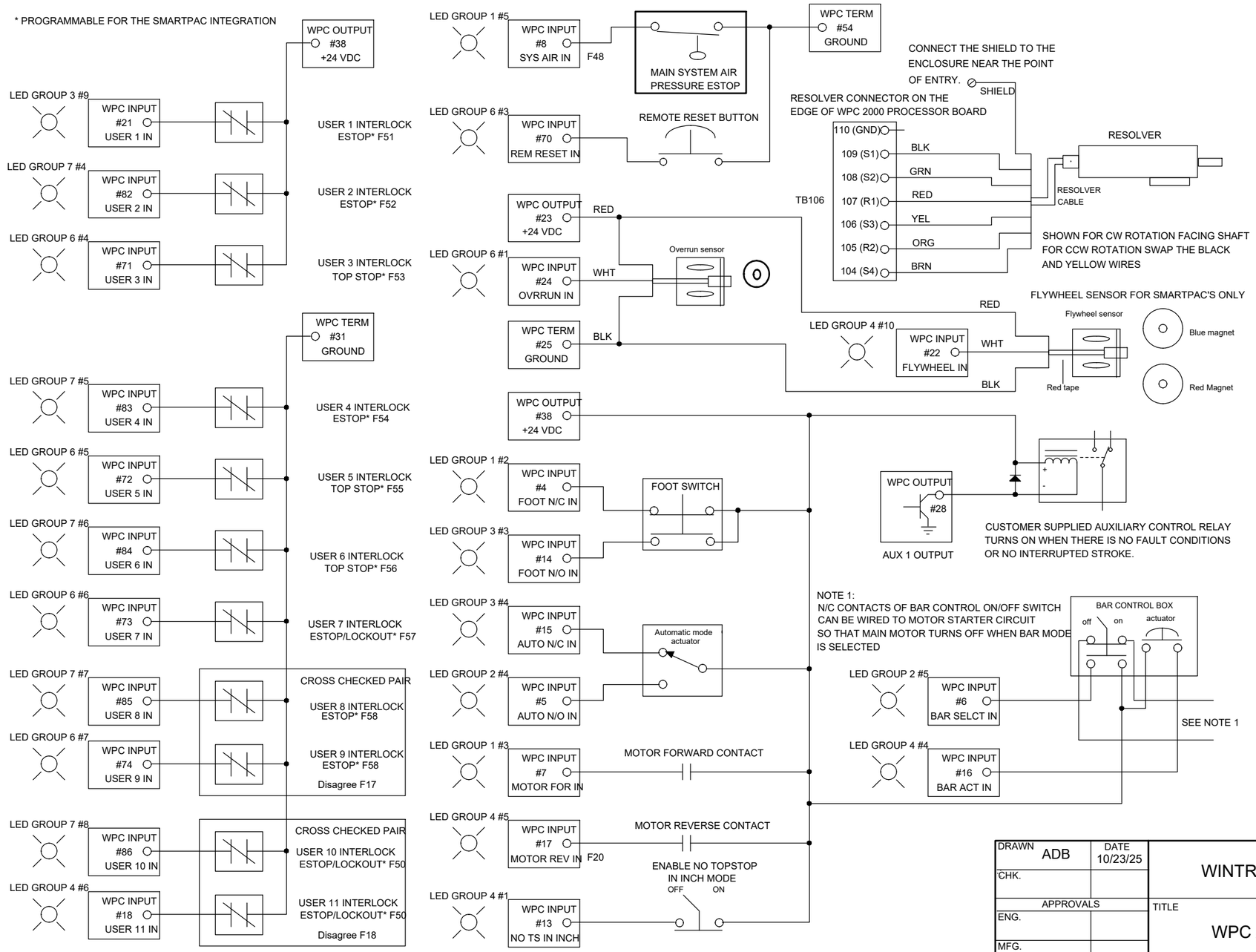

DRAWN ADB	DATE 10/23/25	WINTRISS CONTROLS GROUP	
CHK.			
APPROVALS		TITLE WPC APEX EXTERNAL WIRING	
ENG.			
MFG.			
FILENAME		CODE IDENT NO.	SIZE B / DRAWING NUMBER FIGURE 2 / REV
REL		SCALE	SHEET OF