WINTRISS®

User Manual

Shadow® 9

Safety Light Curtain
1139800
Rev. D August 2019

Tech Support Hotline 800-586-8324 8-5 EST

WINTRISS®

Wintriss Controls Group, LLC
100 Discovery Way
Unit 110
Acton MA 01720 USA
Phone (800) 586-8324
Fax (978) 263-2048

PRINTED IN USA

www.wintriss.com

Requirements You Must Meet When Installing and Using Shadow Safety Light Curtains

⚠ DANGER

DO NOT USE SHADOW LIGHT CURTAINS ON FULL-REVOLUTION POWER PRESSES

- DO NOT use Shadow safety light curtains on full-revolution clutched machinery, which cannot be stopped in mid-stroke.
- Use Shadow safety light curtains only on machinery that can be stopped at any point in the stroke or cycle.

Failure to comply with these instructions will result in death or serious injury.

⚠ DANGER

AVOID IMPROPER INSTALLATION, USE, OR MAINTENANCE

- Follow all procedures in this manual. Perform only the tests and repairs listed in this manual. Use only factory-supplied replacement parts.
- Wire, install and maintain Shadow safety light curtain in accordance with OSHA lockout/tagout regulation 1910.147.
- Ensure that Shadow safety light curtain is installed, tested, and repaired by a qualified person. Only a qualified person should possess keys, special tools, or other means needed to gain access to the control and modify the configuration of the Shadow light curtain.
- Ensure that all metal stamping presses on which Shadows are used meet the requirements and inspection procedures of OSHA regulation 1910.217 and ANSI standard B11.1-2009, which govern the use of presence-sensing devices on metal stamping presses. Ensure that all other machinery, or other devices on which Shadows are used, meet the general machine guarding requirements in OSHA standard 1910.212 and any other regulations and standards that apply.
- Ensure that guarding is installed to prevent access to the machine over, under or around the light curtains.
- Test the operation of your Shadow safety light curtain, using the test procedure shown on the Shadow safety light curtain control enclosure and also included in this manual.
- Perform the checkout and test procedures after any maintenance is done on the Shadow safety light curtain.
- Ensure that supervisors, die-setters, maintenance persons, machine operators, foremen, or any others responsible for the proper operation of the machinery have read and understood all instructions for use of the Shadow light curtain.

Failure to comply with these instructions will result in death or serious injury.

⚠ DANGER

MAKE SURE THAT MACHINERY IS CONFIGURED AND WORKING PROPERLY

- Ensure that the machinery and devices on which Shadow safety light curtains are used meet the general machine guarding requirements of OSHA standard 1910.212 and any other regulations and standards that apply.
- Inspect all stopping mechanisms of the machinery regularly to be sure they work properly.
- DO NOT operate a machine equipped with Shadow safety light curtains if the machine or any of its stopping mechanisms is not in proper working order.

Failure to comply with these instructions will result in death or serious injury.

⚠ DANGER

PREVENT STOPPING MECHANISM FAILURE

- Install and maintain stopping mechanisms of machinery or other devices according to the applicable regulations or standards.
- Regularly inspect all stopping mechanisms of the machinery to ensure proper functioning.

Failure to comply with these instructions will result in death or serious injury.

⚠ DANGER

UNPROTECTED EQUIPMENT MAY CONTINUE TO OPERATE AFTER GUARDED PRESS STOPS

- Equipment that operates with the machinery connected to Shadow safety light curtain may continue to operate after the machinery has received a stop signal.
- Ensure that all operators and other affected personnel know which equipment is connected to Shadow safety light curtain and which is not.

Failure to comply with these instructions will result in death or serious injury.

⚠ DANGER

PREVENT PROJECTILES FROM EXITING HAZARDOUS AREA

Shadow 9 cannot protect a person from a projectile exiting the hazardous area. Install protective cover(s) or fence(s).

Failure to comply with these instructions will result in death or serious injury.

⚠ WARNING

GUARD AGAINST ELECTRIC SHOCK HAZARD

Turn off and disconnect power from the Shadow safety light curtain and from the machinery it is connected to, including the machine control and motor, before making any wiring connections.

Failure to comply with these instructions could result in death or serious injury.

Thank you for purchasing a Wintriss Product. We appreciate your business and want to do whatever we can to ensure your satisfaction. Wintriss products are built to stay on the job day after day, and are backed by an ironclad guarantee, international standards approvals, and unbeatable support.

Whenever you need assistance or service, we back all our products with excellent spare parts inventories, training programs, and prompt repair service. We would like to share with you a list of service options– probably the largest number of service options offered in the industry.

- **Technical Assistance**

  We offer a toll-free line for technical assistance. Call our Wintriss Technical Support Hotline at 1-800-586-TECH (8324) should you have any questions about your equipment. Our technical staff is ready to assist you Monday through Friday, 8 a.m. to 5 p.m. EST. In many cases our experienced technical staff can resolve your inquiry right over the phone.

- **Return Authorization**

  Please call our "800" number for a return authorization (RMA) number to return a product for repair. Returned goods must arrive freight prepaid. In order to process your return quickly, we ask that you provide us with the following pertinent information when you call: purchase order number, shipping address, contact name and telephone number, and product type. The assigned RMA number should appear on all packages returned to Wintriss Controls Group to ensure prompt service.

  At the time of requesting an RMA, you will be quoted a flat-rate repair price for the product you are returning. We ask that you either fax us a PO for that amount or enclose the PO with the returned item. This will enable us to ship the item back to you as soon as the repair has been completed. If the item cannot be repaired or there are additional charges, you will be contacted for approval.

  Please be sure to carefully pack all returned items and ship to our Acton, MA location.

- **Expedited Repair Program**

  Rush service providing 48-hour turnaround is available for most products upon request. An Expedite Fee will be applied to our standard repair rate.

- **Board Exchange Program**

  If your needs are urgent, you can take advantage of our Board Exchange (EX) program. Call our "800" number between 8 a.m. and 5 p.m. EST and we will send a replacement to you overnight. A fee does apply to this service. Contact Wintriss Technical Support at 800-586-8324 for details.

- **Service Center**

  Our Service Center for product service is located at our headquarters in Acton MA. If your equipment requires repair, please contact us at 800-586-8324 to obtain a return authorization number.

  Nationwide field service is also available. Contact the Wintriss Technical Support group at 800-586-8324.

- **Product Training**

  We also offer both product training and maintenance/troubleshooting courses at our Acton, MA and Chicago-area facilities. On-site training is available from the factory or through your local Wintriss representative.

- **Restocking Charge**

  Returned goods are subject to a 20% restocking charge if returned for credit. The minimum charge is $50, not to exceed $250 per item.

Whatever the product, we are committed to satisfying you with innovative engineering, quality construction, reliable performance, and ongoing, helpful support. Call us whenever you need assistance.

Table of Contents

Figures at End of Manual

List of Figures

List of Tables

How to Use This Manual

This manual shows you how to install, operate, and troubleshoot Shadow 9hadow 9 light curtains and includes pertinent information about OSHA and ANSI requirements.

Chapter 1 provides an overview of Shadow 9 operation and features, including product specifications.

Chapter 2 shows you how to install and wire Shadow 9, set Shadow 9 options, and perform checkout and test procedures. The chapter also provides instructions for calculating the safety distance for your light curtains.

Chapter 3 shows you how to operate Shadow 9 and explains Shadow 9's operating modes, LED displays, and programmable fixed blanking and floating blanking features.

Chapter 4 shows you how to troubleshoot Shadow 9. The chapter provides a table of actions you can take to respond to Shadow 9 fault conditions and explains how to check light curtain alignment and check and replace safety relays.

Appendix A shows you how to wire a Shadow 9 transmitter and receiver pair directly to a WPC 2000 or WPC 1000 clutch/brake control.

Appendix B provides a Checkout Procedure Log form that can be used to document the results of the checkout procedure.

Appendix C provides a Test Procedure Log form that can be used to document the results of the test procedure.

Appendix D provides extracts from OSHA regulation 1910.217 and ANSI standards B11.1-2009 and B11.19-2010.

The Glossary provides definitions of terms used in the manual that may be unfamiliar to some users.

Wiring diagrams at the end of the manual provide detailed wiring schematics to help you install your Shadow 9.

Important Highlighted Information

Important danger, warning, caution and notice information is highlighted throughout the manual as follows:

⚠ DANGER

A DANGER symbol indicates an imminently hazardous situation, which, if not avoided, will result in death or serious injury.

⚠ WARNING

A WARNING symbol indicates a potentially hazardous situation, which, if not avoided, could result in death or serious injury.

CAUTION

A CAUTION symbol indicates a potentially hazardous situation, which, if not avoided, may result in property damage.

NOTICE

A NOTICE symbol indicates important information that you should remember, including tips to aid you in performance of your job.

WARRANTY

Wintriss Controls warrants that Wintriss electronic controls are free from defects in material and workmanship under normal use and service for a period of one year (two years for Shadow light curtains) from date of shipment. All software products (SFC/ LETS and SBR), electro-mechanical assemblies, and sensors are warranted to be free from defects in material and workmanship under normal use and service for a period of 90 days from date of shipment. Wintriss's obligations under this warranty are limited to repairing or replacing, at its discretion and at its factory or facility, any products which shall, within the applicable period after shipment, be returned to Wintriss Controls freight prepaid and which are, after examination, disclosed to the satisfaction of Wintriss to be defective. This warranty shall not apply to any equipment which has been subjected to improper installation, misuse, misapplication, negligence, accident, or unauthorized modification. The provisions of this warranty do not extend the original warranty of any product which has either been repaired or replaced by Wintriss Controls. No other warranty is expressed or implied. Wintriss accepts no liability for damages, including any anticipated or lost profits, incidental damages, consequential damages, costs, time charges, or other losses incurred in connection with the purchase, installation, repair or operation of our products, or any part thereof.

Please note:

It is solely the user's responsibility to properly install and maintain Wintriss controls and equipment. Wintriss Controls manufactures its products to meet stringent specifications and cannot assume responsibility for consequences arising from their misuse.

Wintriss Controls Group, LLC
100 Discovery Way
Unit 110
Acton, MA 01720
Telephone: (800) 586-TECH (8324)
(978) 268-2700
Fax: (978) 263-2048
Internet: http://www.wintriss.com

Shadow 9 Safety Light Curtain
USER MANUAL
1139800

Chapter 1 – Introduction

Shadow 9 is a compact, state-of-the-art light curtain consisting of transmitter and receiver optic heads, which can be wired directly to a Wintriss Clutch/Brake Control (WPC) or to an optional Shadow 9 control. You can connect as many as three pairs of Shadow 9 heads in a series that is connected to a control with just one pair of cables.

Shadow 9 light curtains are designed to protect personnel working around dangerous equipment. The system signals the machine to stop if a person's hand (or any other part of the body) comes too close to the hazardous area. However, the invisible light screen does not interfere with normal operation. Unlike mechanical guards that physically block access to the hazardous area, Shadow 9 safeguards personnel with this field of invisible infrared light.

⚠ DANGER

DO NOT USE SHADOW LIGHT CURTAINS ON FULL-REVOLUTION POWER PRESSES

- DO NOT use Shadow safety light curtains on full-revolution clutched machinery, which cannot be stopped in mid-stroke.
- Use Shadow safety light curtains only on machinery that can be stopped at any point in the stroke or cycle.

Failure to comply with these instructions will result in death or serious injury.

⚠ WARNING

OBSERVE SAFETY REGULATIONS AND STANDARDS WHEN INSTALLING EQUIPMENT

- Install and use Shadow safety light curtains according to applicable safety regulations and standards.
- Install Shadow safety light curtains on presses according to the requirements and inspection procedures of OSHA regulation 1910.217 and ANSI standard B11.1-2009.
- Install Shadow safety light curtains on other machinery according to OSHA regulation 1910.212 for general machine guarding and any other regulations that apply.

Failure to comply with these instructions could result in death or serious injury.

NOTICE

USE EXTRACTS FROM SAFETY STANDARDS FOR REFERENCE ONLY

For your convenience, Wintriss has provided extracts from OSHA regulation 1910.217 and from ANSI standards B11.1-2009 and B11.19-2010 in *Appendix D*. These extracts are provided for the user's convenience only and may not reflect the current revisions of these documents. For the most up-to-date information, refer to the latest versions of the original OSHA and ANSI documents.

NOTICE

The "first transmitter" or "first receiver" is the one connected to the WPC or the optional Shadow 9 control box, whether in a cascade or a standalone pair of heads.

UL, CSA, CE, OSHA, and ANSI Compliance

Shadow 9 has undergone independent testing, certification, and/or approval by the following bodies:

1. The Shadow 9 is electro-sensitive protective equipment (ESPE) in accordance with European Union (EU) Machinery Directive Index Annex V, Item 2.

2. EC/EU Declaration of Conformity
   Wintriss declares that the Shadow 9 is in conformity with the requirements of the following EC/EU Directives:
   Machinery Directive 2006/42/EC
   EMC Directive 2004/108/EC, 2014/30/EU

3. Conforming Standards

   (1) European standards EN61496-1 (Type 4 ESPE), EN 61496-2 (Type 4 AOPD), EN61508-1 through -4 (SIL 3 for Type 4 and EN ISO 13849-1:2015 (PL e, Category 4 for Type 4)

   (2) International standards
   IEC61496-1 (Type 4 ESPE), IEC61496-2 (Type 4 AOPD), IEC61508-1 through - 4 (SIL 3 for Type 4), ISO 13849-1:2015 (PL e, Category 4 for Type 4)

   (3) North American standards
   UL61496-1(Type 4 ESPE), UL61496-2 (Type 4 AOPD), UL508, UL1998, CAN/CSA C22.2 No.14, CAN/CSA C22.2 No.0.8

4. Third-Party Certifications

   (1) TÜV SÜD

   - EC Type-Examination certificate: EU Machinery Directive, Type 4 ESPE (EN61496-1), Type 4 AOPD (EN 61496-2)
   - Certificate: Type 4 ESPE (EN61496-1), Type 4 AOPD (EN61496-2), EN 61508-1 through - 4 (SIL 3 for Type 4), EN ISO 13849-1:2015 (PL e, Category 4 for Type 4)

   (2) UL
   - UL Listing: Type 4 ESPE (UL61496-1), Type 4 AOPD (UL61496-2), UL508, UL1998, CAN/CSA C22.2 No.14, CAN/CSA C22.2 No.0.8

5. Other Standards
   The Shadow 9 is designed according to the standards listed below. To make sure that the final

system complies with the following standards and regulations, you are asked to design and use it in accordance with all other related standards, laws, and regulations. If you have any questions, consult with specialized organizations such as the body responsible for prescribing and/or enforcing machinery safety regulations in the location where the equipment is to be used.

- European Standards: EN415-4, EN691-1, EN692, EN693, IEC/TS 62046
- U.S. Occupational Safety and Health Standards: OSHA 29 CFR 1910.212
- U.S. Occupational Safety and Health Standards: OSHA 29 CFR 1910.217
- American National Standards: ANSI B11.1 to B11.19
- American National Standards: ANSI/RIA R15.06
- Canadian Standards Association CSA Z142, Z432, Z434
- SEMI Standards SEMI S2

These rules mandate that a single component failure cannot jeopardize operator safety. Critical components must be duplicated and continually cross-checked during operation to guarantee that a single component failure can never create an unsafe condition. Self-checking circuitry must be able to detect the presence of any faults and of signaling the press to stop.

Shadow 9 Components

Shadow 9 optic heads (see *Figure 1-1*, page 20) are constructed of rugged, heavy-gauge extruded aluminum with 0.98 in. (2.5 mm) wall thickness. These compact heads, which have a 1.38 x 1.38 in (35 x 35 mm) cross-section, come in sizes offering a scanning rage of from 9.4 to 59.8 in. (240 mm to 1520 mm).

Optic heads have an end cap at one end and at the other end an 11.8-in. (300-mm) pigtail with an M12 connector. Use the connector on the pigtail to connect the head to the cable wired to the control (see *Figure 1-2*, page 20). If you install cascaded pairs of heads, remove the end caps from the cascading connectors at the other end by unscrewing an M3 screw. Then, you can attach 7.8-in (200-mm) cascading cables to the cascading connector on transmitter and receiver. Attach an interconnect cable, if necessary, and connect to the pigtails on the next pair of heads in the cascade. This next pair automatically becomes part of the cascade.

Up to three pairs of heads can be connected in series as a cascade – the first pair, plus two cascaded pairs. Interconnect cables with an M12 connector at each end are available in various lengths (see list in *Specifications*, page 29).

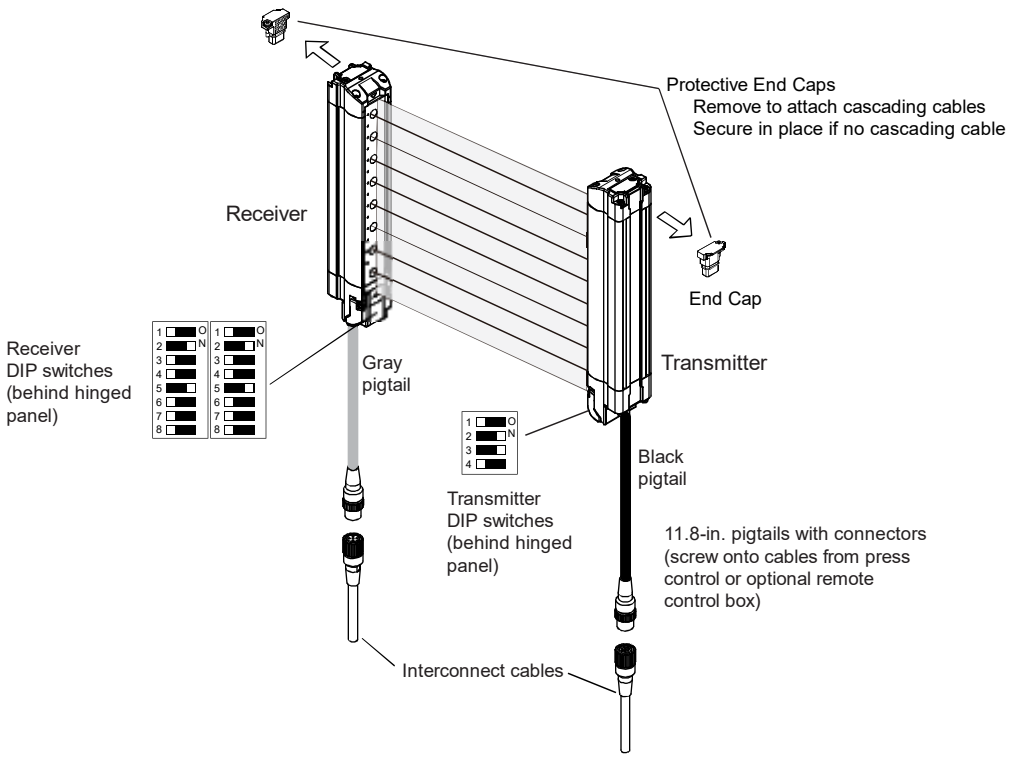

Figure 1-1. Shadow 9 Transmitter and Receiver

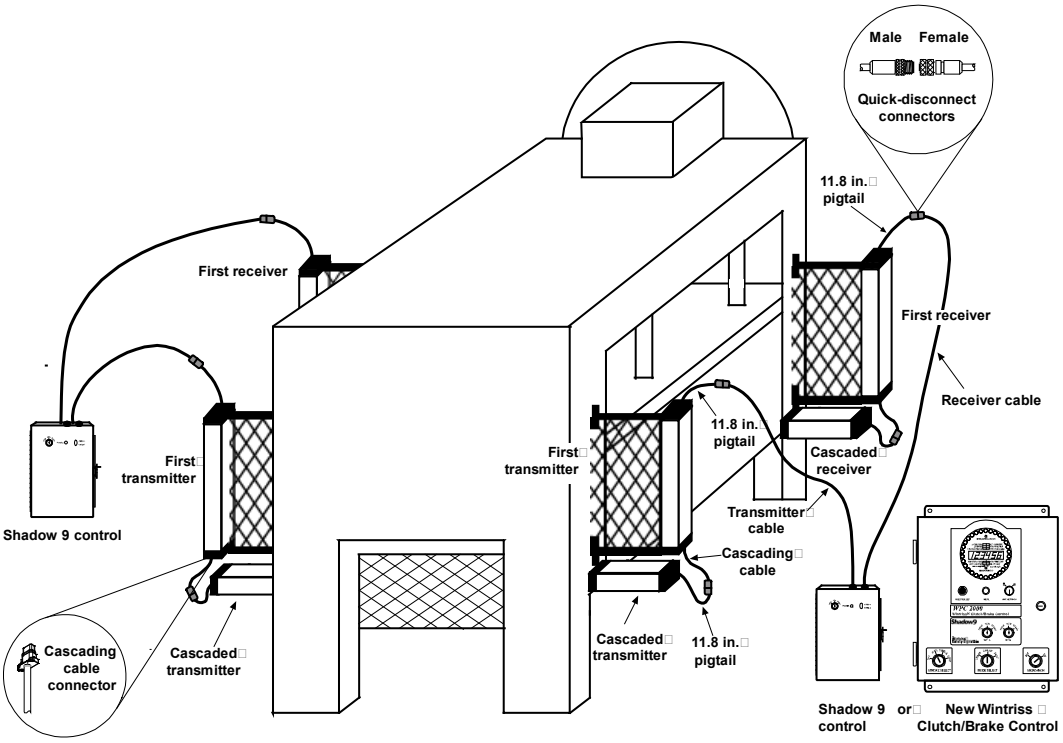

Figure 1-2. Shadow 9 Cascaded Heads

An optional Shadow 9 control (see *Figure 1-3*) is available. Use it unless you are connecting Shadow 9 to a Wintriss Clutch/Brake Control. The optional Shadow 9 control can accommodate any size of transmitter and receiver. No special settings are required. The optional Shadow 9 control contains a power supply and relay circuitry.

For added security, the optional Shadow 9 control comes standard with a key switch. The Program/Run/Start key switch is used alone to reset the light curtain after machinery has been stopped due to a fault (see *Figure 1-3*). The Program/Run/Start key switch can also be used to program a fixed blanking pattern. See *Programming a Fixed Blanking Window*, page 101, for details. In addition, the clasp which secures the door of the control can be padlocked to prevent unauthorized personnel from gaining entry. A screw-down latch for securing the door is also provided.

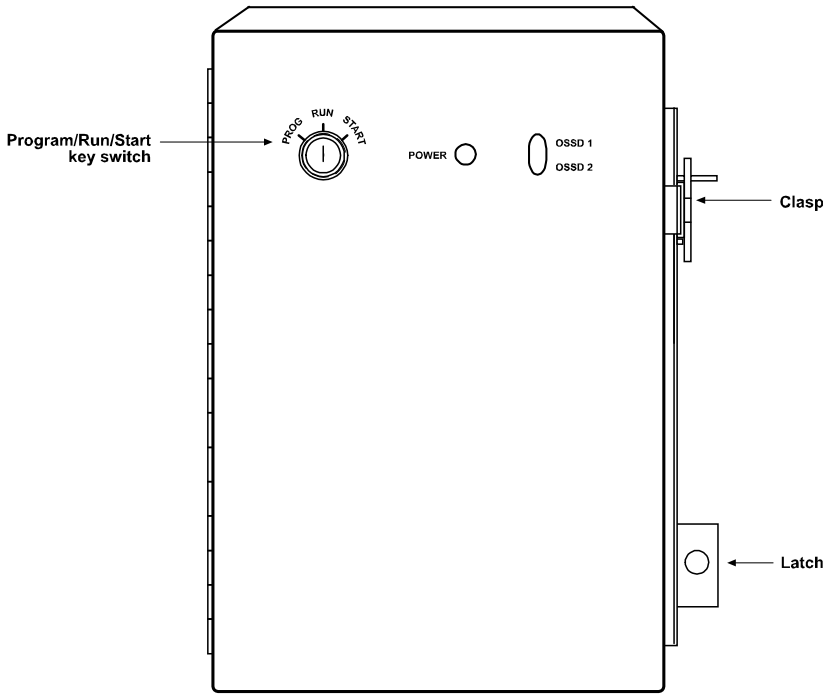

Figure 1-3. Shadow 9 Control

Cables for connecting the transmitter and receiver to the control are available with the light curtain. They are sized in various lengths and fitted with an M12 connector at one end that screws easily into the pigtail-and-connector on the optic heads. The other end of the cable is not terminated, allowing the cable to be wired to the appropriate terminal block in the optional Shadow 9 control (see *Figure 2-27*, page 70) or in the WPC. Transmitter cables are five-conductor and have gray connector overmolds. Receiver cables, which are terminated by a connector with a black overmold, are eight-conductor.

Shadow 9 Operation

⚠ WARNING

UNPROTECTED EQUIPMENT MAY CONTINUE TO OPERATE AFTER GUARDED PRESS STOPS

Ensure that all operators know which device(s) are protected by your Shadow safety light curtains and which are not. Though a protected press will stop when the Shadow light curtain is interrupted, associated feeds and conveyors not protected by Shadow will continue to operate after the press stops.

Failure to comply with these instructions could result in death or serious injury.

The Shadow 9 light curtain is an optoelectronic presence-sensing device. Shadow 9 uses light and electric current to detect any object penetrating its field, and when an object is detected, the light curtain reacts by signaling the press, or other equipment, to stop.

Shadow 9's transmitter and receiver are mounted on either side of the hazardous area. LEDs (light emitting diodes) in the transmitter emit harmless, invisible, infrared light pulses when electric current passes through them. These conical beams of light are aimed at phototransistors in the receiver (see *Figure 1-4*, which produce an electrical signal whenever a light pulse strikes them. An invisible light barrier is formed by these infrared light beams passing between the transmitter and receiver. If one of the phototransistors in the receiver does not "receive" its designated light pulse, as when the operator's hand or another obstruction penetrates the light field, Shadow 9 sends a stop command to the press.

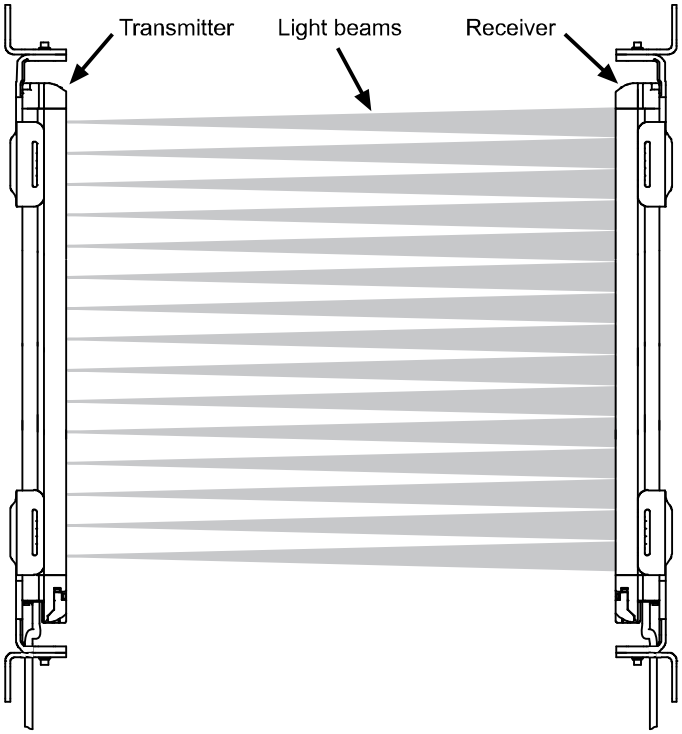

Figure 1-4. Shadow 9 Light Beams

Transmitter LEDs pulse in succession from end to end of the head. Each phototransistor in the receiver detects only the single pulse of light aligned with it and is enabled only at the instant that the beam is anticipated. Shadow 9's electronics must "see" the phototransistor turn "on," then "off" as the beam hits it and disappears. Each phototransistor must turn on, then off, in sequence, or Shadow 9 sends a stop command to the guarded machinery.

To allow receiver(s) and transmitter(s) to synchronize their sequencing, the following conditions must apply at all times:

- On the first pair of heads, the top and/or bottom beams must be aligned and unobstructed
- On all pairs of heads, at least 2 consecutive beams must remain unblanked

For more information, see *Programmable Fixed Blanking,* page 26, and *Initial Installation: Aligning and Tightening Down Shadow 9 Heads*, page 87.

Because the receiver accepts only infrared light pulses of a certain duration in proper sequence, Shadow 9 does not respond to other light sources, continuous or pulsed. Neither normal lighting near the curtain nor changes in area lighting nor even flashing strobe lights affect Shadow 9 operation.

Shadow 9 Object Sensitivity

Shadow 9 light beams are on 0.79-in. (20-mm) centers, enabling the light curtain to detect any object 1.18 in. (30 mm) in diameter or greater. An object smaller than 1.18 in. can pass undetected through Shadow's light field if it travels in a path directly between the light beams. This measure of minimum detection diameter is called the light curtain's "object sensitivity."

Object sensitivity is used in calculating the "safety distance," the distance from the hazardous area of the press that the optic heads must be mounted to allow enough time for the light curtain to react, and the press to stop, before the operator can penetrate the light curtain and reach the hazard (see *Calculating the Safety Distance*, page 36).

Shadow 9 and Control Reliability

⚠ WARNING

OBSERVE PROPER INSTALLATION PROCEDURES

- Install Shadow safety light curtains in compliance with applicable OSHA and ANSI safety regulations (extracts are provided in *Appendix D*).
- Refer to the latest revision of all applicable documents.
- Ensure that your installation meets the control reliability requirements of the applicable regulations.
- Ensure that both optional Shadow control box safety relays are used in any Shadow installation and that they are connected directly to the press control's stop circuit, to a PLC, or to another type of machine control. Wiring is explained in Chapter 2.
- Read carefully and understand the installation instructions before attempting to install and wire Shadows to any control.
- Ensure that installation is performed by qualified personnel.

Failure to comply with these instructions could result in death or serious injury.

⚠ WARNING

UNPROTECTED EQUIPMENT MAY CONTINUE TO OPERATE AFTER GUARDED PRESS STOPS

Ensure that all operators know which device(s) are protected by your Shadow safety light curtains and which are not. Though a protected press will stop when the Shadow light curtain is interrupted, associated feeds and conveyors not protected by Shadow will continue to operate after the press stops.

Failure to comply with these instructions could result in death or serious injury.

NOTICE

OSHA and ANSI have issued regulations for the use of presence-sensing devices such as Shadows. Both organizations require control reliability. See *Appendix D* for more information.

Shadow 9 is "control reliable" as defined by OSHA and ANSI. A control-reliable device must be "constructed so that a failure within the system does not prevent the normal stopping action from being applied to the press when required, but does prevent the initiation of a successive stroke until the failure is corrected" (OSHA 1910.217 (c) (3) (iii) (c)).

All critical components in Shadow 9 are duplicated so that if one component fails, its duplicate will still allow the guarded machinery to be stopped. When a component failure occurs, Shadow 9 immediately detects it and sends a stop signal to the machinery. The light curtain will not allow equipment to resume operation until repairs are made to the failed component.

The Shadow 9 receiver has two solid-state PNP safety outputs that source 24 Vdc when the sensing field is unobstructed. When an obstruction enters the field, Shadow's circuitry instantly de-energizes the outputs. Safety outputs must be wired to either the optional Shadow 9 control or to a WPC.

The Shadow 9 control has two cross-checked "captive contact" safety relays, one N/O (Normally Open), the other either N/O or N/C (Normally Closed). When an obstruction enters the field, Shadow's control circuitry instantly de-energizes the relays, which results in opening the contacts and breaking the stop circuit of the press.

The WPC clutch/brake control also has two "captive-contact" N/O safety relays. When an obstruction enters the sensing field while the machine is energized, WPC instantly de-energizes its relays, stopping the press.

Shadow 9's response time from loss of light to relay contacts open (or de-energized) is 8 to 18 milliseconds, depending on configuration (see *Specifications*, page 29). Even if one of Shadow's control relay contacts fails closed (i.e., the contact welds shut), the second relay will still de-energize and a stop signal will be sent to the machinery. Shadow 9 will also detect the failed relay and will not allow further press operation until the relay is replaced (see *Checking and Replacing Control Relays in Optional Shadow 9 Control Box*, page 116).

Shadow 9 LED Indicators

To provide information about light curtain operation, Shadow 9 provides a number of LED indicators on the transmitter and receiver heads, an optional state indicator lamp on the last receiver, and LEDs on the optional Shadow 9 control.

- Transmitter: LED indicators for operating range, power and lockout (*Shadow 9 LED Indicators*, page 97).

- Receiver: LED indicators for factors such as light curtains obstructed or unobstructed, alignment, blanking, and other settings and conditions (*Shadow 9 LED Indicators*, page 97).
- Optional state indicator lamp: light curtain unobstructed, light curtain obstructed, light curtain slightly misaligned.
- Optional Shadow 9 control box: Power LED and safety relay LEDs (see *Figure 1-3*)
  The green Power LED on the optional Shadow 9 control illuminates when power is being applied to the unit. Illumination of the two green LEDs labelled "OSSD 1" and "OSSD 2" indicates that the safety relays are energized (closed). When the safety relays are de-energized (open), these two LEDs turn off.

LEDs provide information about Shadow 9 operation and settings (see *Shadow 9 Operating States*, below), including:

- ON/OFF (Green/Red) LED–When LED is green, light curtains are unobstructed. When LED is red, light curtains are obstructed or Shadow 9 has experienced an internal fault. The state of the yellow INT-LK (interlock) LED (see next item) indicates which of these conditions applies.
- INT-LK (interlock) (Yellow) LED–Light curtains are obstructed (LED illuminated continuously).
- Blanking (Green) LED–Programmable fixed blanking and/or floating blanking feature has been enabled (see *Programmable Fixed Blanking*, page 26, and *Floating Blanking,* page 27). The factory setting for fixed blanking is "enabled."

The green BLANK LED illuminates to indicate that programmable fixed blanking or floating blanking is enabled. When the obstruction being blanked is present, the ON/OFF LED illuminates green

While you program blanking, the ON/OFF LED illuminates red, and the BLANK and CFG LEDs blink green. If there is an error in blanking programing, the ON/OFF LED illuminates red and the SEQ LED blinks yellow.

Shadow 9 Operating States

Shadow 9 can be in one of five operating states, which are specified by the LED indicators on the first receiver:

- **Curtain Unobstructed (Machine Run)**
  The ON/OFF LED illuminates green and the two safety relays are "Closed" (energized) The protected machine is allowed to operate. Turning the Program/Run/Start key switch to START has no effect.
- **Curtain Obstructed (Machine Stop)**
  The ON/OFF LED illuminates red and the two safety relays are "Open" (de-energized) The protected machine is not allowed to operate. Turning the Program/Run/Start key switch to START has no effect.
- **Interlock**
  The ON/OFF LED illuminates red, the yellow INT-LK (interlock) LED illuminates, the two safety relays are "Open" (de-energized). The Interlock state can be cleared only when the sensing field is free of obstructions and the Program/Run/Start key switch is turned to the START position and released (see Figure 1-3, page 18).

- **Fault Condition**
  The ON/OFF LED illuminates red, the LOCKOUT LED blinks red, and the two safety relays are "Open" (de-energized). The Fault Condition state can be cleared only when the problem that caused the Fault Condition is corrected and either power is recycled to Shadow 9 or the Program/Run/Start key switch is turned to the START position, held there for a few seconds, and released.
- **Blanking Object Removed**
  The green Blanking LED illuminates, the ON/OFF LED illuminates red, the two safety relays are "Open" (de-energized). The protected machine is not allowed to operate. To clear this state, replace the object in its original position or program a new blanking window with a different object or no object.

NOTICE

The optional state indicator lamp gives you an easy-to-see signal of the state of the Shadow 9:
OFF (Red), ON (Green), and Misaligned (Yellow).

The state indicator lamp installs into the cascading connector on the receiver in a standalone pair of heads or in the last pair in a cascade. See *Special Considerations When Using the Optional State Indicator Lamp*, page 49, and *Installing the Optional State Indicator Lamp*, page 53.

Shadow 9 Operating Modes

You can set Shadow 9 to operate in either Automatic Start or Start/Restart Interlock mode.

In **Automatic Start mode**, Shadow 9 powers up in the Curtains Unobstructed state. When an object is detected in the sensing field, Shadow 9 changes from Curtains Unobstructed to Curtains Obstructed. After the object has been cleared, Shadow 9 automatically switches to the Curtains Unobstructed state.

In **Start/Restart Interlock mode**, Shadow 9 powers up in the Interlock state. To switch to Curtains Unobstructed, the operator must turn the Program/Run/Start key switch to START and release it. When an object is detected in the sensing field, Shadow 9 changes from Curtains Unobstructed to Interlock. After the object has been cleared, Shadow 9 remains in the Interlock state until the operator turns the key switch to the START position, holds it there for a few seconds, and releases it, and Shadow 9 switches to Curtains Unobstructed.

Start/Restart Interlock operating mode is particularly useful in perimeter guarding applications when there is a walk-in hazard inside the guarded area.

Additional details about operating mode and instructions for making operating mode settings are provided starting on page 99.

Programmable Fixed Blanking

Shadow 9 allows you to program an area within the sensing field into which a stationary fixture or other object may protrude without triggering a Curtains Obstructed state and stopping the guarded machine. This programmed area, which is created by disabling the beams that normally protect it, is called a fixed blanking window.

Fixed blanking windows may span any number of beams as long as 2 consecutive beams remain unblanked on each pair of heads and the first pair of heads has its top and/or bottom beam unblanked, as well.

Multiple fixed blanking windows can be programmed for any pair of light curtains as long as 3 consecutive beams remain unblanked between fixed blanking windows.

A detailed discussion of fixed blanking and instructions for *Programming a Fixed Blanking Window* are provided starting on page 101,

⚠ DANGER

DO NOT CREATE A FIXED BLANKING WINDOW GREATER THAN ONE BEAM UNLESS THE ENTIRE AREA BETWEEN TRANSMITTER AND RECEIVER IS OBSTRUCTED

Do not blank more than one beam unless the entire area between transmitter and receiver is blocked by a permanent fixture or is guarded.

Failure to comply with these instructions will result in death or serious injury.

If the obstruction being blanked is not large enough to extend all the way from transmitter to receiver, Shadow 9's minimum object sensitivity increases, and the safety distance must be increased accordingly. In this case, you should not program more than one beam as a fixed blanking window (see *Calculating the Safety Distance*, page 36).

Floating Blanking

Shadow 9's floating blanking feature allows you to disable one beam at any location along the length of the light curtain, letting any object 15/16 in (24 mm) or smaller penetrate the sensing field in a random pattern without causing the light curtain to enter a Curtains Obstructed state. The single blanked beam may be used in any segment in a multi-segment installation.

A detailed discussion of floating blanking and instructions for enabling a one-channel blanking window are provided starting on page 104.

Programmable fixed blanking and floating blanking can be used at the same time (see page 105).

The light curtain's minimum object sensitivity (see page 23) increases when a light beam is "blanked," and the safety distance must be increased accordingly (see *Calculating the Safety Distance*, page 36).

Other Shadow 9 Features and Options

Shadow 9 is designed for uncompromising safety and durability under real world conditions. The light curtains have passed stringent environmental stress tests for shock, vibration, impact, exposure to temperature extremes, dust, humidity, and electrical abnormalities.

The optional Shadow 9 control box comes with one auxiliary output. See *Wiring Auxiliary Output*, page 80, for more information.

Shadow 9 optic heads come with standard mounting brackets (see *Figure 1-1*, page 20). These mounting brackets, which can be rotated ±23°, are used to properly align the Shadow 9 heads during installation. On light curtain heads 47.2 in. and 59.8 in. install one adjustable side bracket midway

along the head's length to reduce loads on the head and improve stability. These additional brackets mount to grooves in the heads.

Shadow 9 options that you can purchase from Wintriss include mirrors for two- and three- sided guarding (see *Figure 2-18*, page 62 and *Table 2-3*, page 62) and stands for mounting optic heads and mirrors (see *Figure 2-5*, page 50 and *Table 2-1*, page 51).

Shadow 9 Maintenance

Shadow 9 continues working silently with no adjustment and little maintenance required. You should clean the lens window(s) periodically if the working environment is particularly dusty, dirty, oily or smoky (see *Checking and Cleaning Lens Windows*, page 114). You should also periodically verify proper alignment (see *Initial Installation: Aligning and Tightening Down Shadow 9 Heads*, page 87, and *Checking Alignment*, page 114). If you are using the optional Shadow 9 control, you will need to replace the relay board if a safety relay fails (see *Checking and Replacing Control Relays in Optional Shadow 9 Control Box*, page 116).

Specifications

Scanning heights in. (mm)	9.4 (240),12.6 (320), 18.9 (480), 25.2 (640), 31.5 (800), 37.8 (960), 47.2 (1200), 59.8 (1520).
Scanning range	Default setting: 1 to 65 ft (0.3 to 20 m) Short range setting: 1 to 23 ft (0.3 to 7 m)
Beam spacing	0.79 in. (20 mm) centers
Object sensitivity	1.18 in. (30 mm) Note: use of fixed and/or floating blanking increases this value
Response time	For an individual pair of light curtain heads: 8 ms for up to 31.5 in. (800 mm) 13 ms for all other sizes For cascaded installations, up to three pairs of heads in series: 13 ms for up to 110 in. (2800 mm) combined length of 2 or 3 pairs of heads 18 ms for greater than 110 in. (2800 mm) combined length of 2 or 3 pairs of heads If light curtains are wired to optional Shadow 9 control, add 10 ms to response time for N/O safety relay outputs, 20 ms for N/C output.
Dimensions Optic heads Control box	 See *Figure 2-6* and *Table 2-2*, page 52 7.4 x 10.8 x 2.8 in. (189 x 274 x 70 mm). See *Figure 2-26*, page 68.
Construction Heads Control	 Extruded aluminum; 0.1 in. (2.5 mm) wall min. 14-gauge, .081 in. (2 mm) welded steel with enclosure clasp
Attached Pigtail Cable	11.8 in. (300 mm)
Cascading Cable	7.8 in. (200 mm)
Available Interconnect Cables	with connector on one end for attachment to pigtails on transmitter and receiver: 9.8 ft (3 m), 23.0 ft (7 m), 33 ft (10 m), 50 ft (15 m), 65.6 ft (20 m) ft, 110 ft (30 m) with connectors on both ends for attachment to cascaded heads: 1.6 ft (0.5 m), 3 ft (1 m), 10 ft (3 m), 16 ft (5 m), 23.0 ft (7 m), and 33 ft (10 m)
Cascading	As many as three pairs of heads can be cascaded (connected in series).
Environmental Heads Control Cables Vibration Shock testing	 IP67 IP65 IP67 connector; oil-resistant PVC cable standard 10-55 Hz, multiple amplitude of 0.7 mm, 20 sweeps for all three axes. 10 g,1,000 shocks for each of three axes.
Ambient Temperature	Operating 14 to 131° F (-10 to 55° C) (non-icing) Storage -13 to 158°F (-25 to 70° C)

Ambient Humidity	Operating 35% to 85% (non-condensing) Storage 35% to 95%
Electrical	Power Supply Voltage: 24 Vdc ±20% (ripple p-p 10% max.) Heads: 24 Vdc, 0.5 A max. Optional Shadow 9 control: 100-240 Vac; 0.6 A max; 50-60 Hz EDM Monitor (MPCE): For external dry contacts rated at 50 mA @ 24 Vdc
Light Source	Infrared light-emitting diodes (LEDs), approximately 880 nanometer wavelength
Optics	Angle of divergence and acceptance: ± 2.5°.
Safety Outputs, optic heads	2 solid-state PNP, each sourcing 300 mA @ 24 Vdc, short-circuit-protected Load current 300 mA max. Residual voltage of 2 V max. (except for voltage drop due to cable extension) Capacitive load of 1 µF max Inductive load of 2.2 H max.* Leakage current of 1 mA max.** * The load inductance is the maximum value when the safety output frequently cycles ON and OFF. When you use the safety output at 4 Hz or less, the usable load inductance becomes larger. ** These values must be taken into consideration when connecting elements including a capacitive load such as a capacitor.
Safety outputs, optional Shadow 9 control box	2 cross-checked “captive contact” stop relays, one N/O, the other N/O or N/C, rated for 6 A @ 250 Vac or 6 A @ 30 Vdc
Auxiliary output (non-safety), optional Shadow 9 control box	1 auxiliary output, N/O or N/C, rated for 5 A @ 250 Vac or 5 A @ 30 Vdc
Pigtail	M12 connectors: 5-pin transmitter and 8-pin receiver, IP67 rated when mated, Cables prewired to the sensors Number of wires: transmitter: 5, receiver: 8 Cable length: 11 in. (0.3 m) Cable diameter: 0.24 in. (6 mm) Minimum bending radius: R0.2 in (R5 mm)
Cascading cable	M12 connectors: 5-pin transmitter and 8-pin receiver, IP67 rated when mated Number of wires: transmitter: 5, receiver: 8 Cable length: 8 in (0.2 m) Cable diameter: 0.24 in. (6 mm) Minimum bending radius: 0.2 in. (5 mm)

TX/RX cables	M12 connectors: 5-pin transmitter and 8-pin receiver, IP67 rated when mated Number of wires transmitter: 5, receiver: 8 Cable diameter 0.26 in. (6.6 mm) Minimum bending radius R1.42 in. (R36 mm)
Main	Single-ended cable length (connects heads to control) 23, 33, 49, 66, 100 ft (7, 10, 15, 20, 30 m)
Extension	Double-ended cable (extension cable for head interconnect) 0.5, 1, 3, 5, 7, 10, 15, 20 m (1.6, 3.3, 9.8, 16.4, 23.0, 32.8, 49.2, 65.6 ft)
Extension of Pigtail	328 ft (100 m) max. (emitter/receiver)
Indicators	LED indicators on first (or standalone) transmitter: Operating range – Green Power – Green Lockout – Red LED indicators on first (or standalone) receiver: Top-beam-state – Blue Sequence - Yellow Blanking – Green Configuration – Green Interlock – Yellow External device monitoring – Green Internal error – Red Lockout – Red Stable-state – Green ON/OFF – Green/Red Communication – Green Bottom-beam state – Blue Optional State Indicator Lamp installs on last receiver Light curtain unobstructed – Green Light curtain obstructed – Red Heads slightly misaligned – Blinking Yellow.

Conformity	Conforming standards: See *UL, CSA, CE, OSHA, and ANSI Compliance*, page 18 Performance Level (PL)/Safety category: Type 4 – PL e/Category 4 (EN ISO 13849-1:2015) PFHd: 1.1 × 10-8 (IEC 61508) Proof test interval TM: Every 20 years (IEC 61508) SFF: 99% (IEC 61508) HFT: 1 (IEC 61508) Classification: Type B (IEC 61508-2)
Pollution Degree	Pollution Degree 3 (IEC 60664-1)

Chapter 2 – Installation and Checkout

⚠ DANGER

OBSERVE PROPER INSTALLATION, OPERATION, AND MAINTENANCE PROCEDURES

- Follow all procedures in this manual to ensure proper operation of the light curtain.
- Ensure that the light curtain is installed so it is impossible for anyone to reach over, under, or around it and into the hazardous area of the machine without being detected. Use a light curtain of the correct height in combination with physical guards.
- Install and maintain your machine guarding system according to OSHA standard 1910.212 and any other regulations and standards that apply.
- Wire and install Shadow 9 safety light curtains in accordance with the requirements of OSHA lockout/tagout regulation 1910.147.
- Ensure that Shadow 9 safety light curtains are installed, tested and repaired by a qualified person. Only a qualified person should possess keys, special tools, or other means needed to gain access to the control and modify the configuration of the Shadow light curtain.
- Perform only the tests and repairs listed in this manual.
- Test the operation of your Shadow safety light curtain, using the test procedure shown on the Shadow safety light curtain control box and also included in this manual (see page 92).
- Perform the checkout and test procedures after any maintenance is done on the Shadow safety light curtain.
- Ensure that supervisors, die-setters, maintenance persons, machine operators, foremen, or any other individuals responsible for the proper operation of the machinery have read and understood all instructions in this manual pertaining to the use of Shadow 9 safety light curtains.

Failure to comply with these instructions will result in death or serious injury.

⚠ DANGER

MAKE SURE TO PERFORM SAFETY SYSTEM TESTS

- Perform the checkout and test procedures (see page 92) when you have completed installation of your light curtain and before operating the equipment it is connected to.
- Operate your machinery only after your safety system meets all the requirements of the checkout sequence.
- Perform the test procedure whenever repair, maintenance or modification is performed on your light curtain or the machinery it is connected to.

Failure to comply with these instructions will result in death or serious injury.

⚠ WARNING

GUARD AGAINST ELECTRIC SHOCK HAZARD

- Turn off and disconnect power from the Shadow 9 safety light curtain and from the machinery it is connected to, including the machine control and motor, before making any wiring connections.
- Remove all fuses and “tag out” per OSHA 1910.147 Control of Hazardous Energy (Lockout/Tagout).
- Ensure that installation is performed by qualified personnel.

Failure to comply with these instructions could result in death or serious injury.

NOTICE

Up to three Shadow 9 safety light curtain pairs of transmitter/receiver heads can be connected in a cascade. You can use any pair as the first or additional light curtain in the cascade.

NOTICE

The “first transmitter” or “first receiver” is the one connected to the WPC or the optional Shadow 9 control box, whether in a cascade or a standalone pair of heads.

Installing Shadow 9 is a straightforward procedure. However, you must install the unit with care since Shadow 9 is a safety device that protects press operators and other personnel.

Before proceeding, make sure that you received the following items in your Shadow 9 order:

- One or more pairs of transmitter/receiver optic heads
- An optional Shadow 9 control box (if included in order)
- Two single-ended main cables for connecting the first pair of optic heads, cable lengths specified at time of order, one transmitter cable, one receiver cable
- Double-ended extension cables as needed for extending main cables and/or connecting cascaded optic heads (if included in order)
- Two cascading cables for each pair of cascaded heads
- An optional state indicator lamp (if included in order)

If any of these components is missing, contact Wintriss Tech. Support before starting installation.

NOTICE

Follow instructions exactly for proper installation of Shadow 9.

Calculating the Safety Distance

⚠ DANGER

OBSERVE THE CORRECT SAFETY DISTANCE

- Calculate the safety distance carefully, following the instructions below, and mount your light curtain heads at least the calculated distance from the hazardous area.
- Mount your light curtain heads at least 7.5 in. (191 mm) from the hazardous area regardless of the calculated safety distance.

Failure to comply with these instructions will result in death or serious injury.

⚠ DANGER

OBSERVE CORRECT SAFETY DISTANCE WHEN USING FIXED OR FLOATING BLANKING

- Read *Increasing Safety Distance to Compensate for Blanking Windows*, page 43 before calculating the safety distance. This section explains how to modify the safety distance when you use programmable fixed blanking or floating blanking windows.
- Modify the calculated safety distance as required.

Failure to comply with these instructions will result in death or serious injury.

⚠ DANGER

ADJUST SAFETY DISTANCE TO COMPENSATE FOR LONGER RESPONSE TIME

Determine which model Shadow 9 safety light curtains you have, and use the correct response time for your model light curtain, as shown below, in your safety distance calculations. If you are using the optional Shadow 9 control, add 10 ms to these response times for N/O safety relay connections, 20 ms for N/C relay connections.

Individual pairs of heads:

Up to 31.5 in. (800 mm): 8 ms response time

Greater than 31.5 in. (800 mm): 13 ms response time

Cascade of up to three pairs of heads:

Up to 110 in. (2800 mm) combined length: 13 ms response time

Greater than 110 in. (2800 mm) combined length: 18 ms response time

Safety depends on your installing your light curtain at the correct safety distance from the hazardous area.

Failure to comply with these instructions will result in death or serious injury.

⚠ DANGER

USE BRAKE MONITOR TO CHECK STOPPING TIME

Use a brake monitor where a Shadow 9 light curtain is installed to protect operators whose hands are routinely exposed to a hazardous area, as required by OSHA 1910.217 (c) (3) (5). A brake monitor continually checks that the machine's stopping time does not exceed a predetermined limit.

Failure to comply with these instructions will result in death or serious injury.

The "safety distance," as shown in *Figure 2-1*, is the distance away from the pinch point (or hazardous area) of the press that the Shadow 9 heads must be mounted to allow enough time for Shadow 9 to react, and the press to stop, before the operator can penetrate the light curtain and reach the hazard. The "pinch point" is the area of the press where moving parts can cause injury.

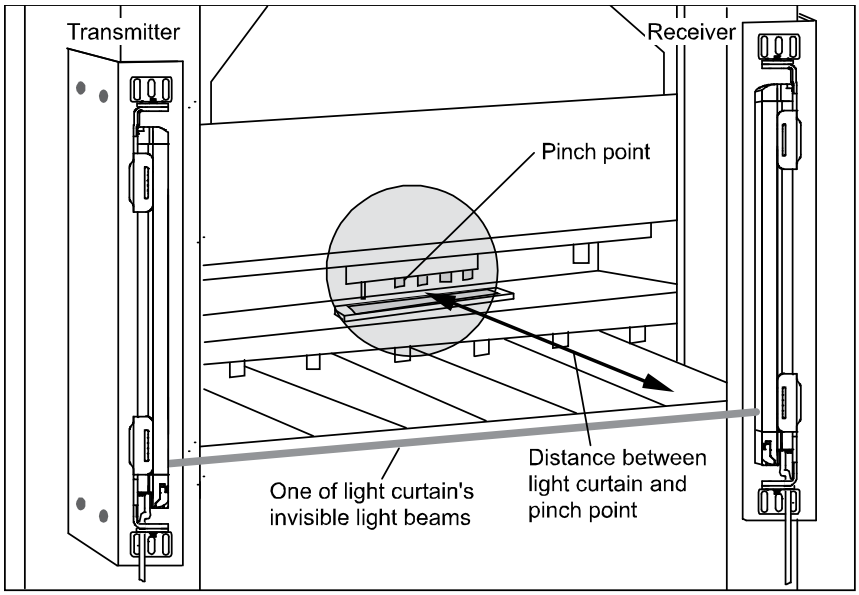

Figure 2-1. Safety Distance: Distance between Pinch Point and Light Curtain

The safety distance is calculated using a formula that incorporates the stopping time of your press. You must mount your light curtains slightly beyond this calculated distance to ensure that Shadow 9 is able to stop the press before an operator's hand reaches the hazardous area.

OSHA and ANSI Requirements

OSHA regulations, ANSI standards, and CSA mandate that all machine safeguarding devices, including Shadow 9, be located at the correct safety distance from the pinch point. OSHA regulation 1910.217 governs the mounting of infrared light curtains to protect mechanical power presses. The OSHA formula contained in this regulation has been used as a guide in other applications as well since there has been no well-known formula for safety distance which governs general machine guarding.

Wintriss, however, recommends that you use the formula contained in ANSI standard B11.1- 2009. This standard has been developed specifically for guarding of mechanical power presses, and the formula contained in B11.1-2009 represents a new consensus on the proper installation of light curtains. The standard should be used as a guide in other applications as well.

For complete information on OSHA regulation 1910.217 and ANSI standards B11.1-2009 and B11.19-2010, see *Appendix D*.

OSHA and ANSI formulas are explained below. If you need additional assistance in calculating the safety distance, call Wintriss Tech. Support.

OSHA Safety Distance Formula

⚠ DANGER

OBSERVE THE CORRECT SAFETY DISTANCE

- Calculate the safety distance carefully, following the instructions below, and mount your light curtain heads at least the calculated distance from the hazardous area.
- Mount your light curtain heads at least 7.5 in. (191 mm) from the hazardous area regardless of the calculated safety distance.
- Be sure your value for Ts includes the response times of all devices that react to stop the press. If your measurement of stop time does not include response time of the press control, light curtain, and any other devices that react to stop the press, the safety distance will be too short.
- Enabling floating blanking increases the depth penetration factor (Dpf) and, therefore, will increase your safety distance. Enabling fixed blanking may also increase Dpf and safety distance.

Failure to comply with these instructions will result in death or serious injury.

⚠ DANGER

USE BRAKE MONITOR TO CHECK STOPPING TIME

Use a brake monitor where a Shadow 9 light curtain is installed to protect operators whose hands are routinely exposed to a hazardous area, as required by OSHA 1910.217 (c) (3) (5). A brake monitor continually checks that the machine's stopping time does not exceed a predetermined limit.

Failure to comply with these instructions will result in death or serious injury.

NOTICE

Wintriss recommends that you use the American National Standards Institute formula for calculating safety distance because it contains more factors, allowing you to calculate the safety distance more precisely. The ANSI formula is explained in the next section (see page 39).

The OSHA safety distance formula as specified in OSHA 1910.217 is

$$Ds = K \times Ts$$

where

Ds is the OSHA safety distance in inches

K is the OSHA-recommended hand-speed constant of 63 inches-per-second

Ts is the stopping time of the press in seconds

The hand-speed constant indicates how far you could theoretically move your hand and arm in one second.

The stopping time Ts must be measured at approximately 90° of crankshaft rotation (or at maximum velocity) and include all the following parameters:

- Response time of the press control that activates the brake
- Response time of the light curtain (see *Specifications*, page 29)
- Response time of other devices involved in stopping the press

Since some increase in stop time can invariably be anticipated due to clutch/brake system deterioration, a percentage factor must also be added to the actual measured stop time of your press when determining the safety distance.

A factor of 20 percent is recommended for presses with brakes that are new or in good condition. A 10-percent factor is recommended for presses with older brakes. Since the stopping time for older brakes is longer due to wear, less time needs to be added.

An example of calculating the safety distance using the OSHA formula

The OSHA formula for calculating the safety distance is:

Ds = 63 x Ts

We will use a stop time of 0.190 seconds for this example. This includes the reaction time of all devices noted above in signaling the press to stop except the response time of the light curtain. Next, we will add the Shadow 9 response time and the braking percentage factor. We will use a worst-case response time of .018 seconds for a Shadow 9 system with a protected length of 172 in. (4369 mm) or greater. We will assume that our brakes are new and add 20% to the stop time measurement (.20 x 0.190 = .038). Then:

Ts =	0.190 sec. stopping time	+ 0.018 sec. Shadow 9 response time	+ .038 sec. braking factor

Ts = 0.246 sec.

Now, we will calculate safety distance:

Ds = 63 x Ts

Ds = 63 x 0.246

Ds = 15.5 in.

Using the OSHA formula, we have calculated that Shadow 9 heads must be mounted at least 15.5 in. from the hazardous area.

ANSI Safety Distance Formula

⚠ DANGER

OBSERVE THE CORRECT SAFETY DISTANCE

- Calculate the safety distance carefully, following the instructions below, and mount your light curtain heads at least the calculated distance from the hazardous area.
- Mount your light curtain heads at least 7.5 in. (191 mm) from the hazardous area regardless of the calculated safety distance.
- Be sure your value for Ts includes the response times of all devices that react to stop the press. If your measurement of stop time does not include response time of the press control, light curtain, and any other devices that react to stop the press, the safety distance will be too short.
- Enabling floating blanking increases the depth penetration factor (Dpf) and, therefore, will increase your safety distance. Enabling fixed blanking may also increase Dpf and safety distance.

Failure to comply with these instructions will result in death or serious injury.

⚠ DANGER

USE BRAKE MONITOR TO CHECK STOPPING TIME

Use a brake monitor where a Shadow 9 light curtain is installed to protect operators whose hands are routinely exposed to a hazardous area, as required by OSHA 1910.217 (c) (3) (5). A brake monitor continually checks that the machine's stopping time does not exceed a predetermined limit.

Failure to comply with these instructions will result in death or serious injury.

The ANSI B11.1 safety distance formula, which is recommended by Wintriss, is

Ds = K x (Ts + Tc + Tr + Tbm) + Dpf

where

Ds is the ANSI safety distance in inches

K is the OSHA-recommended hand-speed constant of 63 inches per second

Ts is the stopping time of the press (or other machine) in seconds Tc is the response time of the press control or other machine control Tr is the response time of the light curtain

Tbm is the additional stopping time of the press (or other machine) allowed by the brake monitor

Dpf is the depth penetration factor

This formula is similar to the OSHA formula except that it incorporates additional variables (e.g., response times, brake monitor setting, and depth penetration factor).

The hand-speed constant indicates how far you could theoretically move your hand and arm in one second.

Ts, Tc, and Tr are the worst-case response times of the press (or other machine), of the control, and of the light curtain. The response time of the press Ts is measured at approximately 90° of crankshaft rotation, or at maximum closing velocity. The response time of the control Tc is the time it takes for the control to activate the press's brake. The response time *Tr* for Shadow 9 is between 13 ms (for protected lengths up to 110 in. (2.80 m)) and 18 ms (for protected lengths 110 in. (2.80 m) or greater)

Tbm is additional time added to the other response times in the ANSI formula to reflect brake wear. It is calculated as follows:

Tbm = brake monitor setting – (Tc + Ts)

The brake monitor setting is a preset value that, when exceeded, causes the press control (or other control) to automatically stop the press. When the preset value is reached, it indicates that excessive brake wear has occurred, and it is time for repair of the brake.

See instructions for your brake monitor to determine the proper brake monitor setting. Generally, the setting is 120% of the measured stopping time (Tc + Ts) when your brakes are new. It is 110% of the stopping time (Ts + Tc) for older brakes.

The depth penetration factor Dpf equals 3.07 in. (78.0 mm). This is a measure of how far an object, like an operator's hand, can move through the light curtain before the light curtain reacts. Dpf is related to the object sensitivity.

Object sensitivity is the smallest diameter object that Shadow 9 can detect anywhere in its field. Object sensitivity (S) for Shadow 9 is 1.18 in. (30 mm) with beam centers of 0.79 in. (20 mm). An object smaller than 1.18 in. diameter could pass through the light field if it traveled in a path directly between the light beams.

For instructions on calculating the safety distance with one beam blanked, refer to *Increasing Safety Distance to Compensate for Blanking Windows*, page 43.

An example of calculating the safety distance using the ANSI formula

The ANSI formula for calculating safety distance is

Ds = K x (Ts + Tc + Tr + Tbm) + Dpf

Let's use the following numbers for our variables in the formula:

K = 63 inches per second

Ts + Tc = 0.190 sec.

We include Ts and Tc together because many stop time measuring devices measure the stopping time of the press control as well as the stopping time of the clutch/brake mechanism.

Tr = .0.018 sec.

Tbm = 0.228 sec. – 0.190 sec = .038 sec.

Dpf = 3.07

Now let's put our numbers into the formula:

Ds = 63 x (0.190 + 0.018 + .038) + 3.07

Ds = (63 x 0.246) + 3.07

Ds = 15.5 + 3.07

Ds = 18.57 in.

The distance from the pinch point that the light curtain must be mounted is 18.57 in.

When using the ANSI safety distance formula, be sure to perform calculations in the following order:

(1) Add Ts + Tc + Tr + Tbm first.

(2) Multiply the result by 63.

(3) Add this result to Dpf. This is Ds.

If you do not follow this calculation order, your safety distance calculation will be incorrect.

European Safety Distance Formulas

There are two European safety distance formulas: one for systems with a minimum object sensitivity of 40 mm or less, the other for systems with a minimum object sensitivity of greater than 40 mm. Formulas are based on standard EN999.

Formula for Systems with Object Sensitivity of 40 mm or Less

When the minimum object sensitivity of the light curtain is 40 mm or less, use the following formula to calculate the safety distance:

S = (K x T) + C

where:

S = the minimum distance in millimeters from the pinch point to the sensing point, line, plane or field

K = 2000 mm/s

T = the overall system stopping performance in seconds T = t1 + t2

t1 = response time of the safety light curtain in seconds t2 = maximum stopping time of the machine in seconds

C = 8(d-14 mm), but not less than zero

d = the minimum object sensitivity of the light curtain in millimeters

In other words:

S = (2000 mm/s x T) + 8(d - 14 mm)

This formula applies for all minimum distances of S up to and including 500 mm. The minimum value of S is 100 mm.

If S is found to be greater than 500 mm using the formula above, then the following formula can be used.

S = (1600 mm/s x T) + 8(d - 14 mm)

Formula for Systems with Object Sensitivity Greater than 1.57 in. (40 mm)

When the minimum object sensitivity of the light curtain is greater than 1.57 in. (40 mm), as when you are using blanking windows (see *Increasing Safety Distance to Compensate for Blanking Windows*, page 43), use the following formula to calculate the safety distance:

S = (K x T) + C

where:

S = the minimum distance in millimeters from the pinch point to the sensing point, line, plane or field

K = 1600 mm/s

T = the overall system stopping performance in seconds T = t1 + t2

t1 = response time of the safety light curtain in seconds

t2 = maximum stopping time of the machine in seconds

C = 850 mm

In other words:

S = (1600 mm/s x T) + 850 mm

Factors Affecting the Safety Distance Formula

When light curtains are used for machine initiation, their minimum object sensitivity must be 30 mm or smaller (based on EN999; other standards may be different). In this case, the formula given in *Formula for Systems with Object Sensitivity of 40 mm or Less*, above, applies except that the minimum distance S must be greater than 150 mm. The formula for C becomes:

C = 1200 mm - (0.4 x H), but not less than 850 mm

where:

H = the height of the sensing field above the floor in mm

Increasing Safety Distance for Perimeter Guarding

⚠ DANGER

DO NOT INSTALL CONTROL INSIDE THE GUARDED AREA FOR PERIMETER GUARDING

The Shadow 9 control must be placed outside the guarded area for perimeter guarding applications. The guarded machine must only be restarted using a switch located outside and with a full view of the area of hazardous motion. Use of Start/Restart Interlock operating mode (see page 100) is suitable for this type of application.

Failure to comply with these instructions will result in death or serious injury.

For perimeter safeguarding, there is another consideration: personnel might be walking while simultaneously reaching into a safeguarded area. Although there is no commonly accepted “walking speed constant” like the “hand constant,” you might use ergonomic tables or possibly even 100 inches per second, which is a conservative European “speed constant.” For perimeter guarding, the formula would be:

$$Ds = (100) \times (Ts + Tc + Tr + Tbm) + Dpf$$

Increasing Safety Distance to Compensate for Blanking Windows

⚠ DANGER

DO NOT CREATE A FIXED BLANKING WINDOW GREATER THAN ONE BEAM UNLESS THE ENTIRE AREA BETWEEN TRANSMITTER AND RECEIVER IS OBSTRUCTED

Do not blank more than one beam unless the entire area between transmitter and receiver is blocked by a permanent fixture or is guarded.

Failure to comply with these instructions will result in death or serious injury.

When you activate a fixed or a floating blanking window, you must increase the calculated safety distance for each beam that is blanked. Blanking increases the minimum diameter of an object that the light curtain can detect, and, therefore, the depth penetration factor used in the ANSI safety distance formula.

When blanking is inactive, Shadow 9 can sense an object 1.18 in. (30 mm) in diameter. The depth penetration factor (Dpf) with no beams blanked is 3.07 in. (78 mm).

In order to prevent vibration from activating the light curtain unnecessarily, Shadow 9 has been designed to allow some flexibility in the area covered by programmable fixed blanking windows. Each fixed blanking window has a positional tolerance of ± 1 beam, allowing a 1-beam window, for example, to expand to 2 beams or contract to no beams without causing a Curtains Obstructed operating state. As a result, when determining the safety distance for a fixed blanking window, you must include an additional beam in your calculations.

Each beam you program as a fixed blanking window creates an additional 1.58 in. (40 mm) gap in the light field (2 x 20 mm, the space between beams). For a one-beam fixed blanking window, therefore, Shadow 9’s object sensitivity is 2.76 in. or 70 mm (1.18 in.+ 1.58 in.), and the Dpf is 8.45 in. (214.6 mm). Using this new depth penetration factor in the ANSI safety distance formula, a one-beam fixed blanking window increases the safety distance by approximately 5.38 in. (136.6 mm).

Beyond one beam, the object sensitivity for a fixed blanking window becomes large enough for an entire arm to penetrate the light curtain without being detected, and 36 in. must be added to the safety distance.

The safety distance does not need to be increased if the area programmed as a fixed blanking window is entirely blocked by a fixture such that operator intrusion into this area is impossible. For instance, you might have a work table that juts out into the light field but takes up the whole space between the transmitter and receiver that is “blanked” and, therefore, unprotected by the light curtain.

Shadow 9’s one-beam floating blanking window does not have a positional tolerance. To calculate the safety distance for a one-beam floating window, add the space between beams (i.e., 0.79 in., or 20 mm) to Shadow’s object sensitivity with no beams blanked (1.18 in., or 30 mm) to get an adjusted object sensitivity of 1.97 in. (50 mm). This yields a Dpf of 5.76 in. (146.3 mm), or a 2.69 in. (68.3 mm) safety distance increase for the one-beam floating blanking window.

Since Shadow 9’s floating blanking window may be used in any light curtain in a cascaded installation (see *Increasing Safety Distance to Compensate for Blanking Windows*, page 43), the safety distance must be increased by 2.69 in. (68.3 mm) for all light curtains in the cascade.

Providing Pass-through Protection within the Safety Distance

⚠ DANGER

PREVENT OPERATOR FROM BEING ABLE TO STAND BETWEEN LIGHT CURTAIN AND HAZARDOUS AREA

Ensure that the operator cannot position himself or herself between the light curtain and the hazardous area. Use another pair of light curtains or a mechanical barrier at knee to waist height to prevent the operator or a passerby from being trapped between the light curtain and the hazard.

Failure to comply with these instructions will result in death or serious injury.

“Pass-through protection” must be provided for areas within the calculated safety distance in which operators may have to move. For safety distances of 6 in. or more, there is a danger that the operator could become trapped between the light curtain and the pinch point.

A recommendation would be to install a second pair of light curtains at waist height mounted horizontally between the vertical light curtain and the hazard (see *Figure 2-2*, below). The length of the horizontal light curtain should be the minimum needed to detect the thinnest operator standing between the vertical light curtain and pinch point. For example, a 9.4-in. cascaded light curtain located in the center of a 12-in. safety distance at waist height should be adequate.

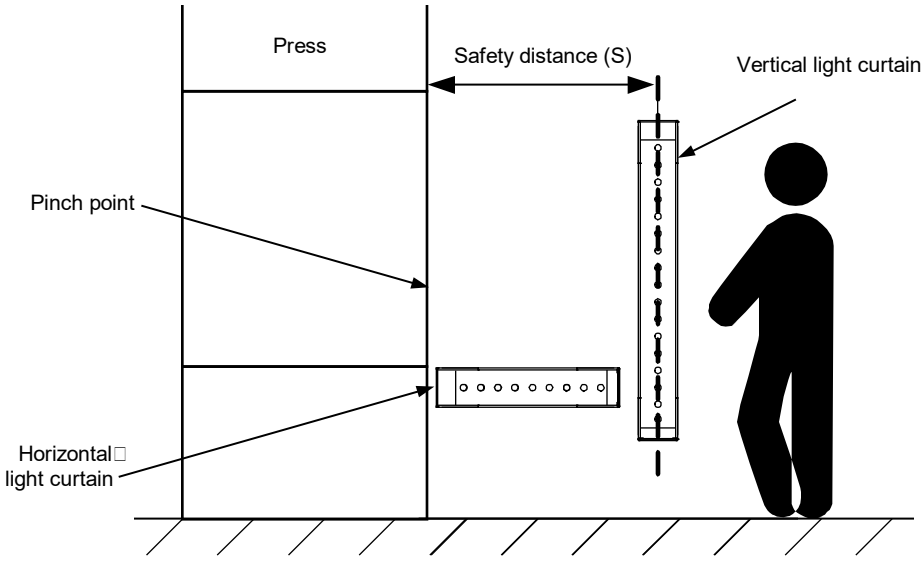

Figure 2-2. Pass-through Protection

With Shadow 9, two pairs of optic heads can be wired to the same WPC press control, making this configuration easily implemented.

All areas between the light curtains and pinch point that are not guarded by Shadow 9 must be protected by supplemental guarding (see *Figure 2-3*, below).

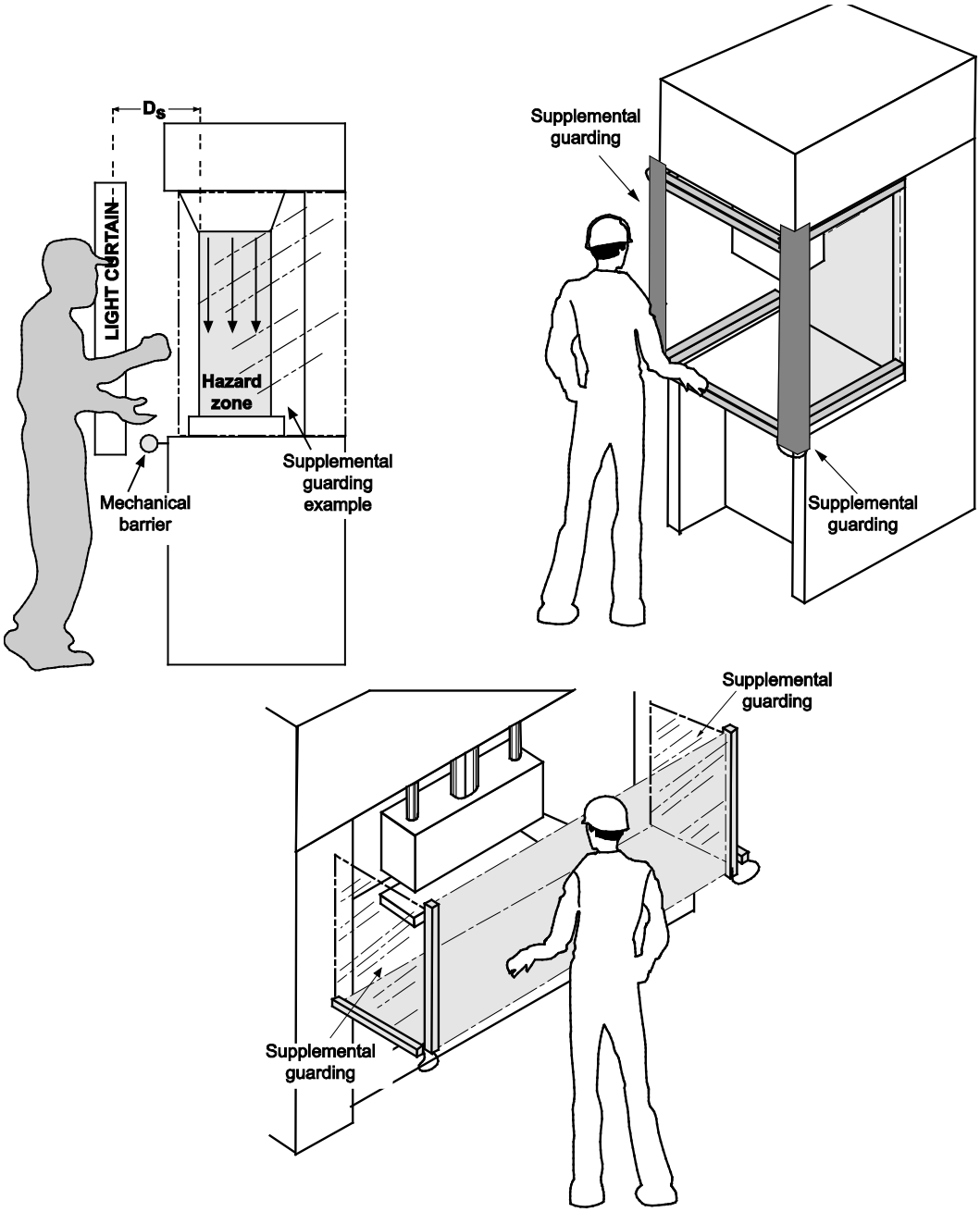

Figure 2-3. Supplemental Guarding

Height Considerations

⚠ DANGER

AVOID IMPROPER INSTALLATION

Ensure that the light curtain is installed so it is impossible for anyone to reach over, under, or around it and into the hazardous area of the machine without being detected (see *Figure 2-3*, page 46). Use the correct height light curtain, combined with ancillary physical guards.

Failure to comply with these instructions will result in death or serious injury.

⚠ DANGER

PREVENT OPERATOR FROM BEING ABLE TO STAND BETWEEN LIGHT CURTAIN AND HAZARDOUS AREA

Ensure that the operator cannot position himself or herself between the light curtain and the hazardous area. Use another pair of light curtains or a mechanical barrier at knee to waist height to prevent the operator or a passerby from being “trapped” between the light curtain and the hazard.

Failure to comply with these instructions will result in death or serious injury.

Once you have determined the correct safety distance, you must determine the proper height at which to mount your light curtains. Light curtains must be installed so it is impossible for anyone to reach over, under, or around them and into the hazardous area without being detected. It is essential, therefore, to select light curtains of the right length combined with ancillary physical guards. Shadow 9 comes in sizes ranging from 9.4 in. to 59.8 in.

Special Requirements for Presence Sensing Device Initiation (PSDI) for Machines Other Than Mechanical Power Presses

Presence Sensing Device Initiation (PSDI) is a configuration in which the light curtain is used to start a machine other than a mechanical power press after an object is removed from the sensing field. Use of PSDI places additional requirements on guarding and safety controls. PSDI does not allow using certain light curtain features such as cascaded heads (to guard additional sides of a machine), mirrors, programmable fixed blanking, and floating blanking. Contact Wintriss Tech Support for further information. Good sources of reference for PSDI include ANSI RIA 15.06-1999 and ANSI B11.2-1995 (R2000).

Planning Your Light Curtain Installation

Using the safety distances you calculated, plan how to arrange the light curtain heads.

Mounting Location Requirements

⚠ DANGER

AVOID IMPROPER INSTALLATION

Ensure that the light curtain is installed so it is impossible for anyone to reach over, under, or around it and into the hazardous area of the machine without being detected. Use the correct height light curtain, combined with ancillary physical guards.

Failure to comply with these instructions will result in death or serious injury.

⚠ DANGER

PREVENT OPERATOR FROM BEING ABLE TO STAND BETWEEN LIGHT CURTAIN AND HAZARDOUS AREA

Ensure that the operator cannot position himself or herself between the light curtain and the hazardous area. Use another pair of light curtains or a mechanical barrier at knee to waist height to prevent the operator or a passerby from being "trapped" between the light curtain and the hazard.

Failure to comply with these instructions will result in death or serious injury.

⚠ DANGER

LOCATE PROGRAM/RUN/START KEY SWITCH OUTSIDE THE HAZARDOUS ZONE

Install the WPC or optional Shadow 9 control box containing the Program/Run/Start key switch in a location that provides a clear view of the entire hazardous zone and where it cannot be activated from within the hazardous zone.

Failure to comply with these instructions will result in death or serious injury.

⚠ DANGER

AVOID INSTALLING IN AREAS SUBJECT TO INTENSE INTERFERING LIGHT

Do not install Shadow 9 in areas exposed to strong, interfering light sources, such as direct sunlight.

Failure to comply with these instructions will result in death or serious injury.

⚠ DANGER

AVOID INSTALLING IN AREAS SUBJECT TO STRONG ELECTROMAGNETIC FIELDS

Do not install Shadow 9 in environments where a strong electromagnetic field may be produced.

Failure to comply with these instructions will result in death or serious injury.

The mounting location you choose for your Shadow 9 heads must meet the following requirements:

- It must be impossible for anyone to reach over, under, or around the light curtains and into the hazardous area of the press without being detected.
- Light curtains should not be mounted near pathways used by forklifts, die carts, and other material-handling equipment.
- The mounting location must allow unobstructed access to the point of operation.
- Light curtains must be mounted an adequate safety distance from the pinch point to allow time for the press to stop once the light curtain has been interrupted (see *Calculating the Safety Distance*, page 36).
- The mounting location must be chosen so that every route to the press's pinch point or hazardous area is guarded.
- Ambient light from the sun, electric lamps, and other sources must not interfere with Shadow 9 operation.

A pair of Shadow 9 light curtain heads, a transmitter and a received, by themselves provide guarding on one side of the press. Mirrors used with one pair of Shadow 9 heads can provide 3-sided protection by "bending" the light curtain around the hazardous area. Additional pairs of heads can be connected in a cascade for multi-sided guarding. When access to the hazardous area is not completely guarded by one or more pairs of Shadow 9 heads and Shadow 9 mirrors, or cascaded pairs of heads, however, other guarding means, such as mechanical side guards, must be installed, in accordance with OSHA/ANSI guidelines.

Special Considerations When Using the Optional State Indicator Lamp

The state indicator lamp mounts on the last receiver in a cascade or on the receiver of a standalone pair of heads

If you have the optional state indicator lamp, plan your light curtain configuration so you can see it during normal operation. Bear in mind that you also sometimes need to see the indicator LEDs on the first receiver.

Installations often place the first pair of heads as the vertical guard and a cascaded pair horizontally for pass-through protection. However, to make the state indicator lamp easy to see, place the last cascaded pair of heads in the most visible location. See *Figure 2-4* for an example.

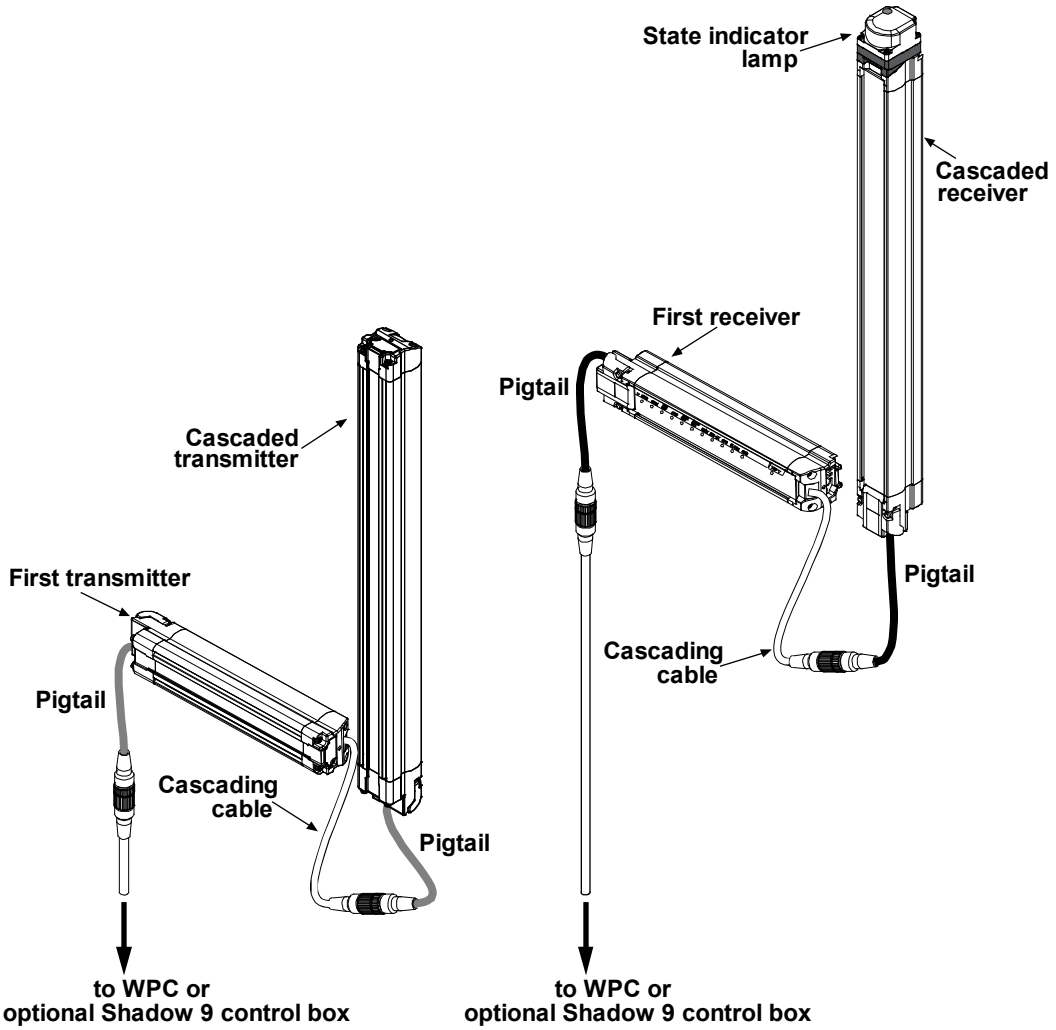

Figure 2-4. Making the State Indicator Lamp Most Visible

Designing and Installing Mounting Supports and Floor Stands

Shadow 9 light curtains can be mounted on floor stands or on purchased or custom supports attached to your machinery, using the Shadow 9 standard mounting brackets on the top and bottom of each light curtain head.

Stands in various heights are available from Wintriss (see *Figure 2-5* and *Table 2-1*, below). Wintriss does not supply other kinds of mounting supports, so you must provide your own.

Information about designing and mounting your own custom supports as well as where you can buy support structures is available from Wintriss Tech. Support.

Supports and stands must meet the following conditions:

- They must provide a rigid mounting surface for the Shadow 9 heads. Brackets must be made of strong, thick steel. Stands must be rigidly attached to the floor.
- They must locate the heads far enough from the point of operation so that they are at or beyond the calculated safety distance.
- They must allow the heads to be easily aligned.
- They must allow shock mounts to be used to install the optic heads. Four shock mounts are shipped with each head.

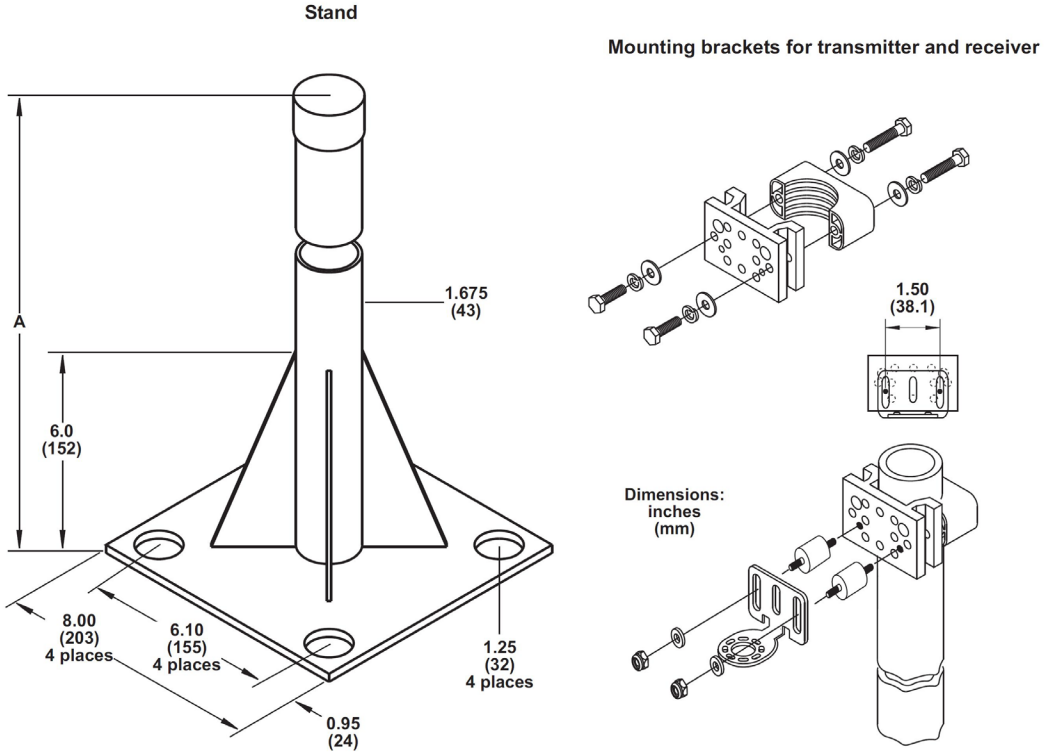

Figure 2-5. Shadow 9 Stand Dimensions (Shown with Mounting Brackets for Heads)

Table 2-1. Shadow 9 Stand Height and Weight

Height (A), in (mm)	Weight, lb (kg)
48 (1219)	19.3 (8.8)
72 (1829)	24.7 (11.2)
96 (2438)	30.1 (13.7)

Supports must be designed to fit the shape of your particular press. For instance, on straight- side presses you can mount angle iron (L-shaped) directly to a sidewall of the press. On gap-frame presses, you may have to mount the light curtains on the bed or platform of the press.

On gap-frame presses, do not attach the top Shadow 9 bracket to the press frame and the bottom bracket to the bolster. The upper portion of the press deflects (pulls away) from the bolster during the work portion of the stroke.

Both ends of the Shadow 9 optic heads must be mounted so that vibration does not cause the units to go out of alignment. The mounting supports themselves may be attached to your press at one end only, to the bolster of the press, for instance.

NOTICE

In applications where light curtains will be exposed to shock and vibration, it is recommended that you secure light curtain heads at both ends where possible. Use additional brackets to support longer heads (see *Figure 2-6*, page 52).

You can mount the Shadow 9 heads directly to a vertical wall or column of the press if the location meets all mounting requirements, including safety distance.

When mounting brackets on the bolster of the press, choose your location carefully. Make sure the brackets do not prevent dies from being installed in and removed from the press.

See *Figure 2-6* and *Table 2-2*, below, for layout and hole dimensions of the Shadow 9 heads and standard brackets.

Standard Mounting Brackets

NOTICE

Install cascading cables, adjustable side brackets, and/or state indicator lamp before installing the standard mounting brackets.

Standard mounting brackets attach to both ends of Shadow 9 transmitters and receivers. The brackets slide onto the housings and are retained by screws (see Installing Standard Brackets on Optic Heads, page 56). These brackets adjust by ±23° to facilitate installation and alignment. If you need to pivot a bracket more than 23°, remove the screws that hold the mounting plate to the bracket, reposition the mounting plate and re-fasten with the screws.

You can mount Shadow 9 standard brackets (included) parallel or perpendicular to the light beam. Perpendicular mounting is typical on gap frame presses.

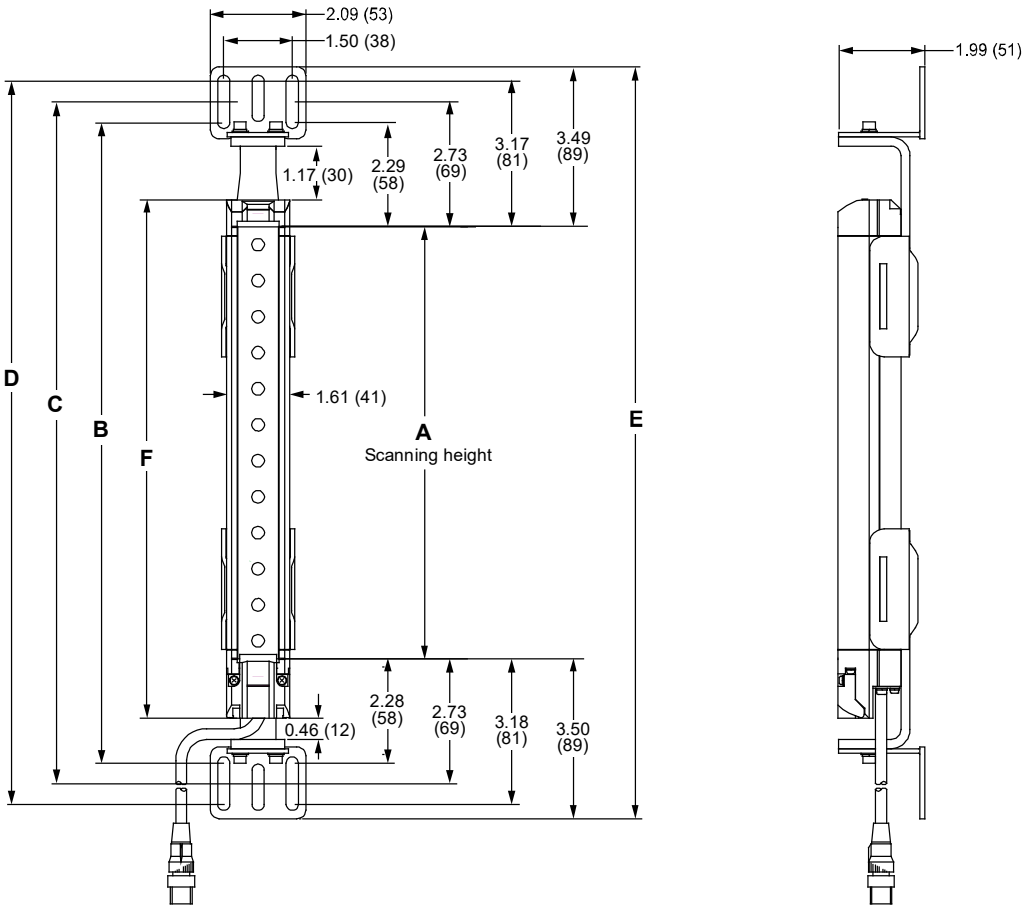

Figure 2-6. Shadow 9 Optic Heads: Mounting Dimensions

Table 2-2. Light Curtain Dimensions in Inches (Millimeters) (see Figure 2-6*)*

Scanning Height A	B	C	D	E	F
9.4 (240)	14.02 (356)	14.92 (379)	15.83 (402)	16.46 (418)	11.34 (288)
12.6 (320)	17.17 (436)	18.07 (459)	18.98 (482)	19.61 (498)	14.49 (368)
18.9 (480)	23.46 (596)	24.37 (619)	25.28 (642)	25.91 (658)	20.79 (528)
25.2 (640)	29.76 (756)	30.67 (779)	31.57 (802)	32.20 (818)	27.09 (688)
31.5 (800)	36.06 (916)	36.97 (939)	37.87 (962)	38.50 (978)	33.38 (848)
37.8 (960)	42.36 (1076)	43.27 (1099)	44.17 (1122)	44.80 (1138)	39.68 (1008)
47.2 (1200)	51.81 (1316)	52.72 (1339)	53.62 (1362)	54.25 (1378)	49.13 (1248)
59.8 (1520)	64.41 (1636)	65.31 (1659)	66.22 (1682)	66.85 (1698)	61.73 (1568)

Installing the Optional State Indicator Lamp

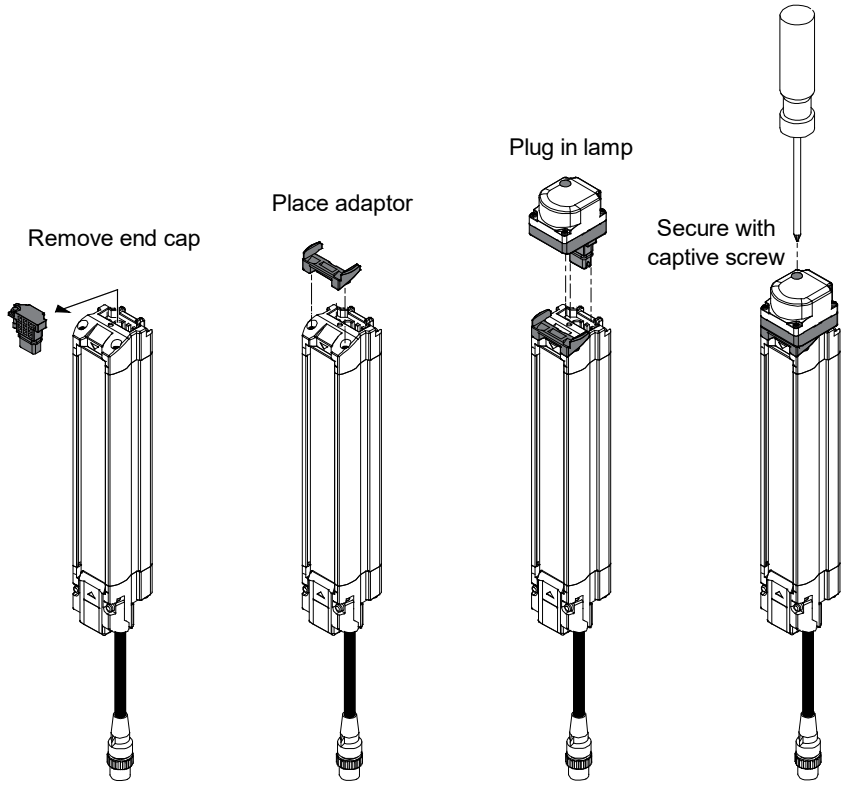

Figure 2-7. Installing the Optional State Indicator Lamp on Receiver Head

Install the optional state indicator lamp on the receiver of a standalone pair of heads or the last pair of heads in a cascade. Refer to Figure 2-7 and follow these steps to install the optional state indicator lamp.

1. Loosen the captive retaining screw on the end cap and remove the end cap from the cascading connector.
2. Place the lamp adaptor so it is retained in the two holes in the top of the head housing.
3. Plug the state indicator lamp into the cascading cable connector.
4. Tighten the captive retaining screw to secure the state indicator lamp.

NOTICE
Be sure the small gasket on the lamp's connector is present and correctly placed.

NOTICE
When you remove an end cap, store it in a safe place for later use.

Installing Adjustable Side Brackets

NOTICE

Adjustable side brackets are provided as required for longer Shadow 9 heads: 47.2 in (1200 mm) and 59.8 in (1520 mm).

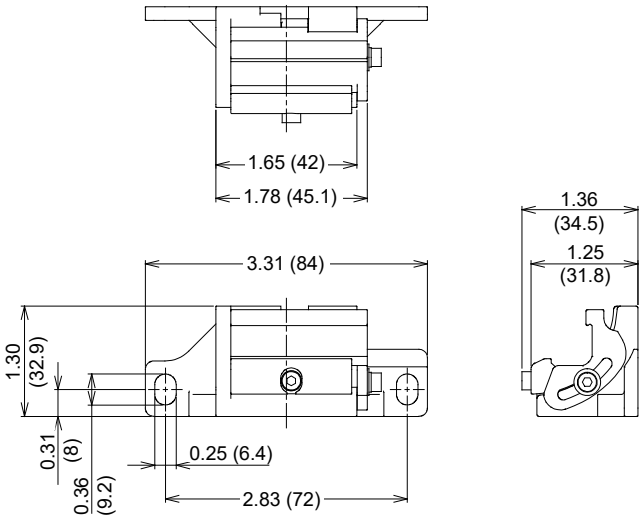

Figure 2-8. Adjustable Side Bracket Dimensions [in. (mm)]

In addition to the standard brackets that hold the ends of the heads (*Installing Standard Brackets on Optic Heads*, page 56), Shadow 9 heads 47.2 in (1200 mm) and 59.8 in (1520 mm) in length require adjustable side brackets to reduce loads on the heads and improve stability. Adjustable side brackets and shock mounts are provided with these heads.

Install one adjustable side bracket on each head midway along its length, as shown in the figure below. These brackets adjust ±15 degrees.

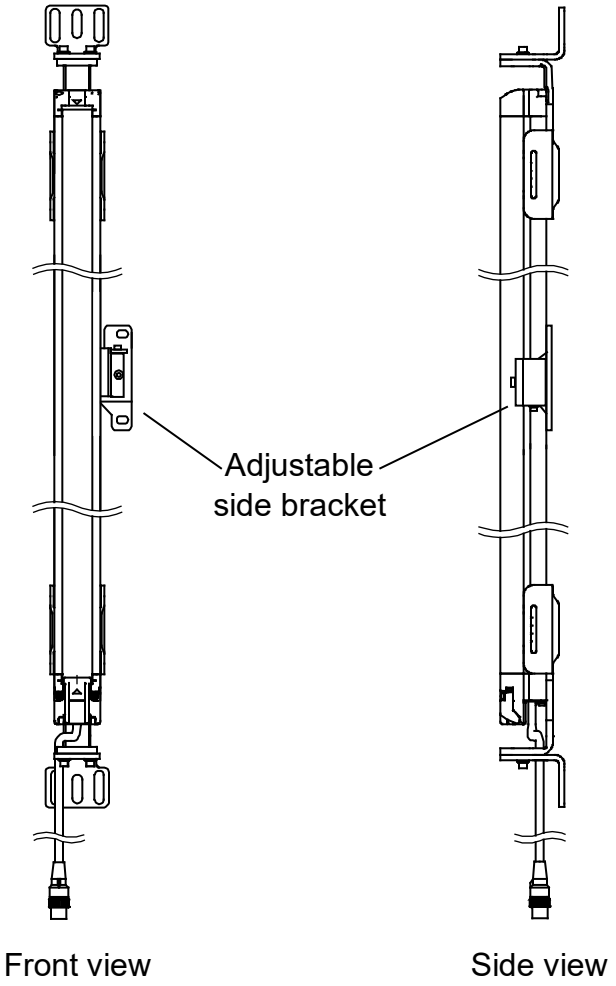

Figure 2-9. Shadow 9 Adjustable Side Brackets

To install the adjustable side brackets, complete the steps below, referring to the figures.

1. Loosen the retaining screw.
2. Fit the adjustable side bracket onto the Shadow 9 housing, as shown in *Figure 2-10*.
3. Slide the adjustable side bracket to the midpoint of the head.
4. Secure by tightening the retaining screw, *Figure 2-11*. Install using the shock mounts provided.

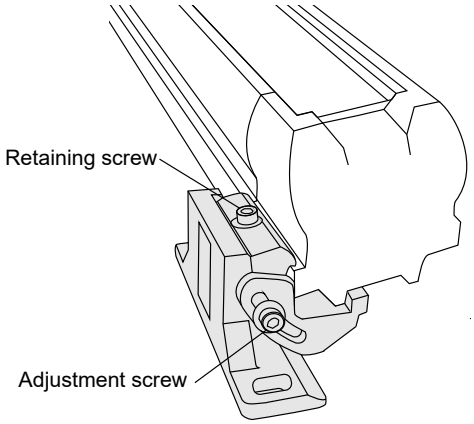

Figure 2-10. Fitting Adjustable Side Bracket to Shadow 9 Head

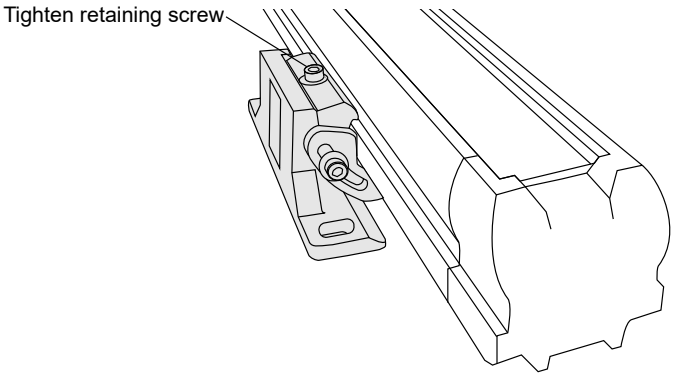

Figure 2-11. Securing the Adjustable Side Bracket

Installing Standard Brackets on Optic Heads

Standard brackets are supplied, configured for backside mounting, where the back of the head is toward the mounting surface. To use side mounting (back of head perpendicular to the mounting surface), adjust the standard bracket as shown in *Figure 2-12*, *below*. Loosen the two screws nearest the mounting holes and turn the mounting bracket to the appropriate side.

NOTICE

Before installing the standard brackets, install any cascading cables, adjustable side brackets or the optional state indicator lamp. See *Connecting Cascaded Heads*, page 73; *Installing Adjustable Side Bracket*, page 54; *Installing the Optional State Indicator Lamp*, page 53.

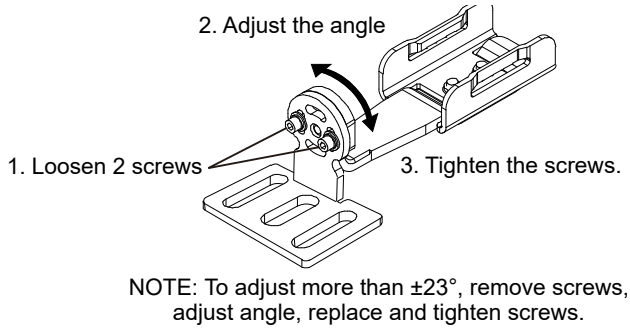

Figure 2-12. Adjusting Angle of Standard Bracket for Side or Backside Mounting

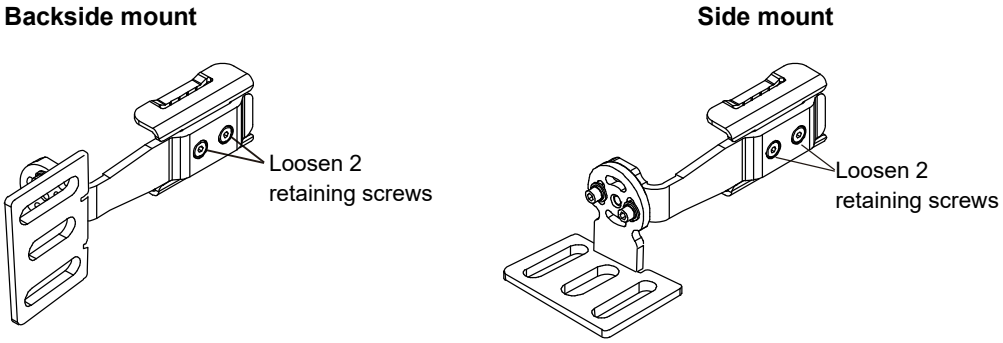

Figure 2-13. Loosening the Retaining Screws on the Standard Bracket

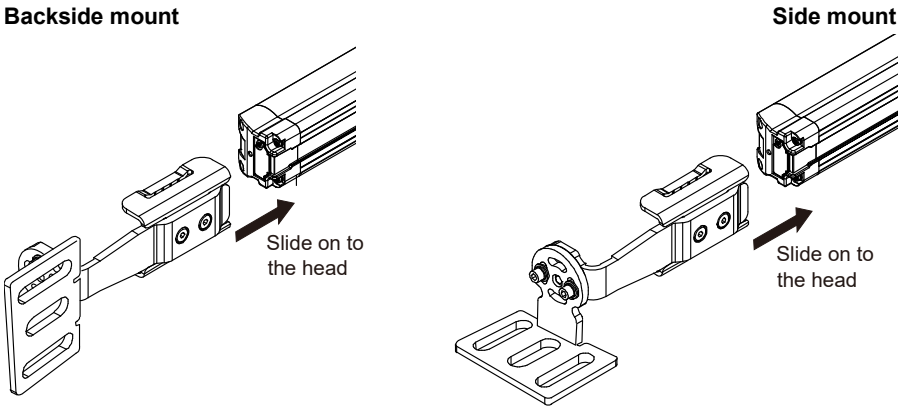

Figure 2-14. Sliding Standard Bracket onto the Head

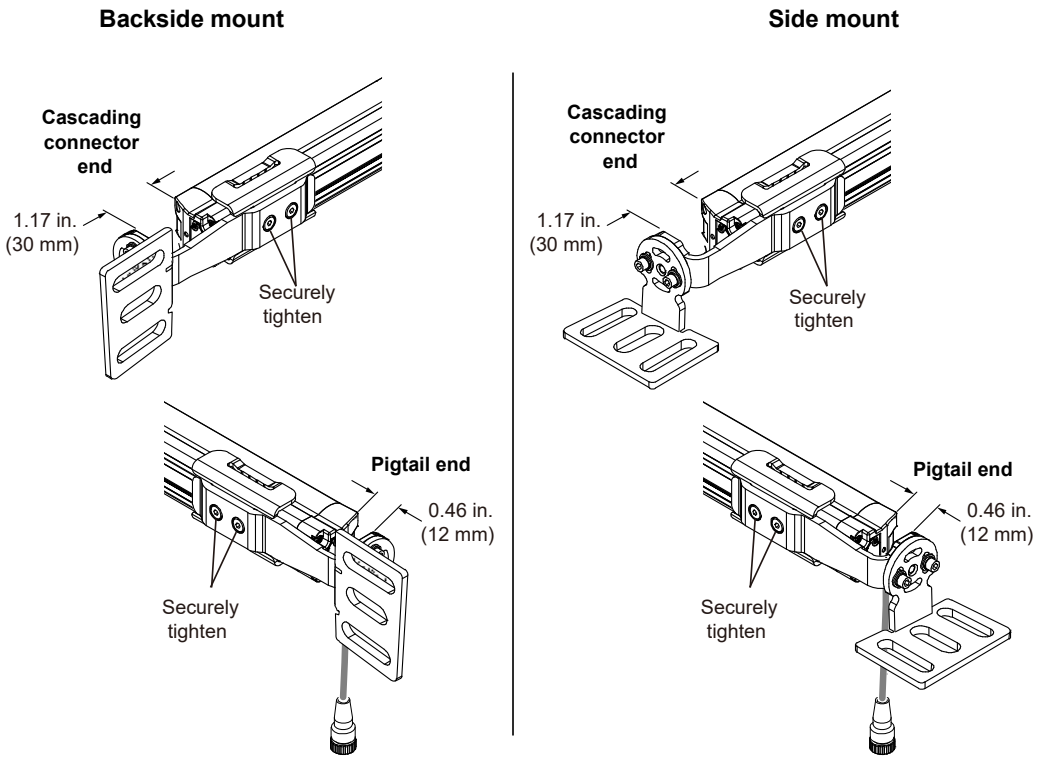

Figure 2-15. Bracket Clearances

NOTICE

If you are using an adjustable side bracket (Installing Adjustable Side Bracket, page 54) attach it before attaching the standard brackets.

Before attaching standard brackets install any of the following that you are using:

- cascading cable (*Connecting Cascaded Heads*, page 73)
- optional state indicator lamp (Installing the Optional State Indicator Lamp, page 53)
- adjustable side bracket (*Installing Adjustable Side Bracket*, page 54;)

Follow these steps to install the standard brackets on top and bottom of each optic head:

1. Loosen the two retaining screws indicated in Figure 2-13*, above*.
2. Slide the standard bracket onto the optic head. Leave the clearances shown in *Figure 2-15,* above: 0.46 in. (12 mm) on the pigtail end and 1.17 in, (30 mm) on the opposite end.
3. Securely tighten the two retaining screws.
4. Repeat to install a standard bracket on the other end of the optic head.

Aligning Brackets

The design of your mounting supports must allow adjustment of the Shadow 9 heads once they are mounted. Installation process includes fine tuning the alignment by moving the heads up and down and/or rotating them.

Shadow 9 standard mounting brackets can rotate ±23° to facilitate installation and alignment. If you need to pivot a bracket more than 23°, remove the mounting screws, move the bracket 45° or 90°, and reattach the bracket to the head.

Shadow 9s can be mounted with pigtails pointed up or down provided the transmitter and receiver are oriented in the same direction. Shadow 9 heads can be mounted at any angle provided they are in the same plane. Vertical mounting is easiest, however.

When mounting your brackets, you can draw a leveling line, using the center of the bracket holes as the end points (see *Figure 2-16*, below). When you mount the Shadow 9 brackets to the holes, the Shadow 9 light curtains will be aligned or close to aligned.

Use a plumb line or leveling line and square to properly align the brackets. Use the bed of your press (if applicable) or the floor (if level) as a leveling reference point. Make sure the brackets are placed in the same plane.

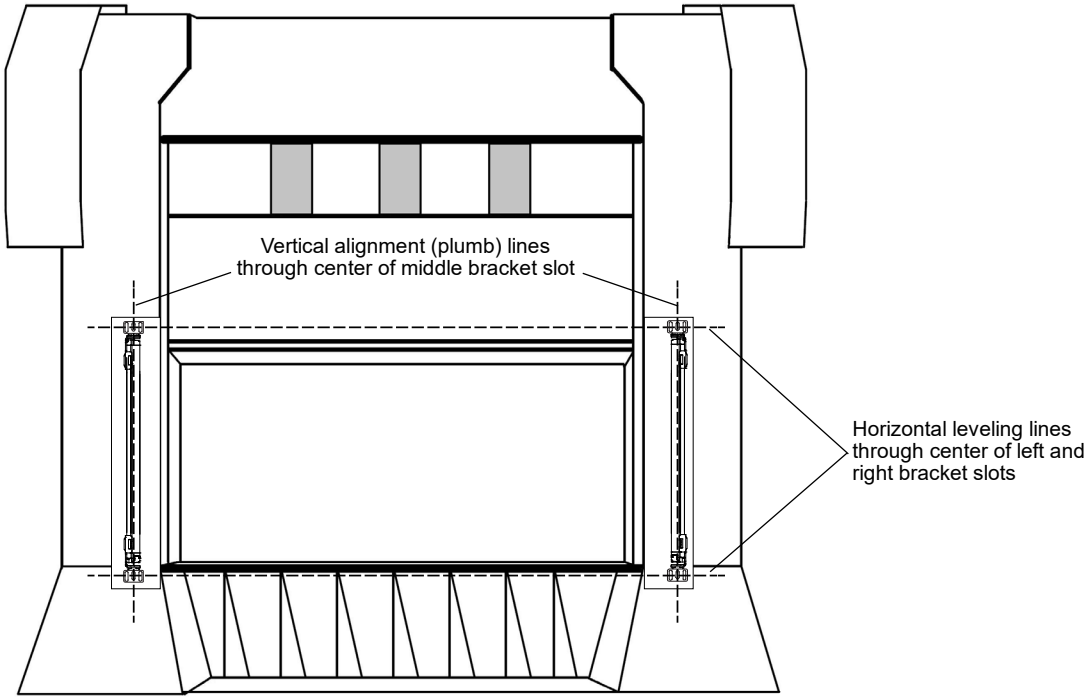

Figure 2-16. Aligning Brackets Using Mounting Holes

Maximum Openings for Side Guards

When mechanical side guards are used in addition to Shadow 9 light curtains for three-sided guarding, you must ensure that the openings between or around the guards meet OSHA requirements. You must also ensure that the openings in the guard material itself (wire, extruded mesh, rods, etc.) or between the guards and hazardous area meet OSHA requirements. Table 2-3 shows the maximum dimensions of openings allowed by OSHA as provided in OSHA Table 0-10.

Table 2-3. OSHA Table 0-10

Distance of Opening from Pinch Point (in.)	Maximum Dimension of Opening (in.)
1/2 to 1 1/2	1/4
1 1/2 to 2 1/2	3/8
2 1/2 to 3 1/2	1/2
3 1/2 to 5 1/2	5/8
5 1/2 to 6 1/2	3/4
6 1/2 to 7 1/2	7/8
7 1/2 to 12 1/2	1 1/4
12 1/2 to 15 1/2	1 1/2
15 1/2 to 17 1/2	1 7/8
17 1/2 to 31 1/2	2 1/8

Using Mirrors with Shadow 9

NOTICE

MIRRORS DECREASE SCANNING DISTANCE AND ANGLE OF DIVERGENCE

- Allow for a reduction in scanning range of 12% for each mirror you use. Since Shadow 9 has a default scanning range of up to 65 ft (or up to 23 ft with the short range: option switch SWB 6 set to ON, see page 84, you reduce the scanning range of the unit 7.8 ft (or 2.8 ft) for each mirror you install.
- Allow for a reduction in angle of divergence if you use mirrors. Mirrors greatly reduce the light curtain's vibration tolerance and make alignment more critical.

You can purchase optional mirrors to use with Shadow 9 for two- or three-sided guarding. Wintriss supplies front-reflective mirrors that provide optimal light reflection. Use only genuine Wintriss mirrors. Other mirrors or reflective surfaces may severely reduce vibration tolerance or scanning distance.

A typical setup of Shadow 9 heads and mirrors in a three-sided guarding application is shown in *Figure 2-17*, below. The Shadow 9 heads are aimed at the mirrors, and the light beams from the transmitter are reflected by the mirrors to the receiver. See *Initial Installation: Aligning and Tightening Down Shadow 9 Heads*, page 87 for instructions on aligning transmitter and receiver.

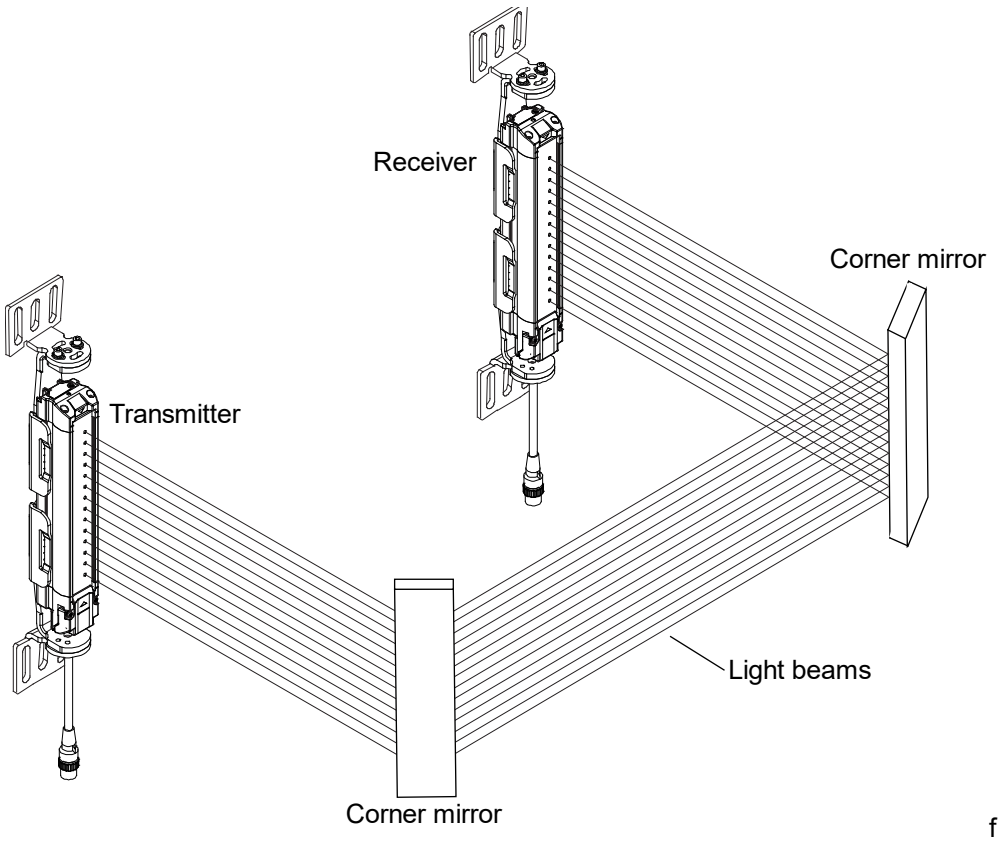

Figure 2-17. Shadow 9 with Mirrors for Three-sided Guarding

The Shadow 9 light curtains and mirrors do not have to be arranged in a rectangle as shown in *Figure 2-17*. You can adjust the mirrors to reflect light from the Shadow 9 transmitter at angles different from 90 degrees.

Shadow 9 optic heads must be aligned with the mirrors so that each phototransistor in the receiver can detect the corresponding light beam from the transmitter after it has been reflected by the mirror(s). Choose mirrors of the correct height for the size heads you are using.

Dimensions of Wintriss mirrors are shown in *Figure 2-18* and *Table 2-3*, below.

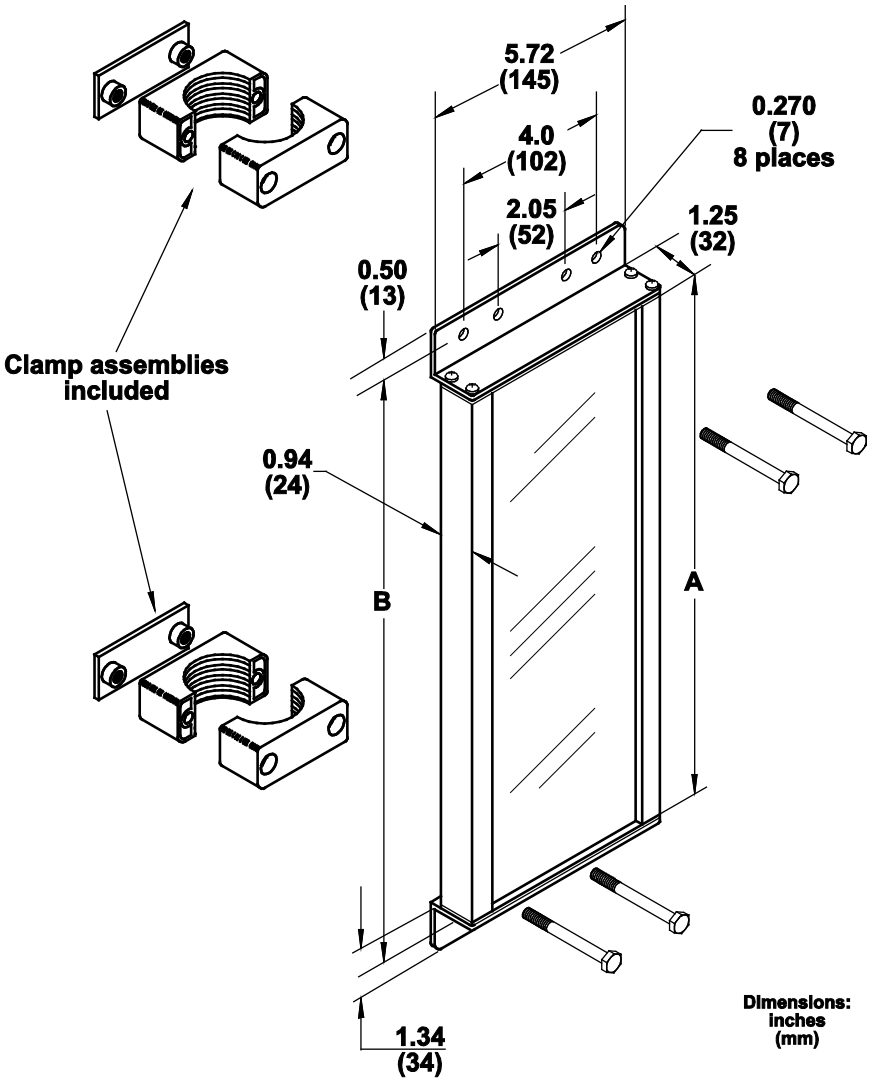

Figure 2-18. Shadow 9 Mirror Dimensions

Table 2-3. Shadow 9 Mirror Dimensions, in. (mm) (see Figure 2-18*)*

Light Curtain Scanning Height	**A**	**B**
12.6 (320)	13.5 (343)	15.2 (386)
18.9 (480)	21.5 (546)	23.2 (589)
25.2 (640)	29.5 (749)	31.2 (792)
31.5 (800)	33.5 (851)	35.2 (894)
37.8 (960)	41.5 (1054)	43.2 (1097)
47.2 (1200)	49.5 (1257)	51.2 (1300)
59.8 (1520)	61.5 (1562)	63.2 (1605)

Reflective Surface Interference

A reflective surface adjacent to the sensing field can deflect the light beam and may cause an obstruction in the field not to be detected (see *Figure 2-20*, below, and *Figure 2-21*, page 64). The reflective surface may be part of the machine, mechanical guard or workpiece. Therefore, a minimum distance (d) must exist between the reflective object and the center line of the Shadow 9 sensing field. The Test Procedure (see *Test Procedure*, page 93) must be used to test for this condition.

In *Figure 2-19*, below, the interruption is clearly detected. The reflective object is outside of the beam angle.

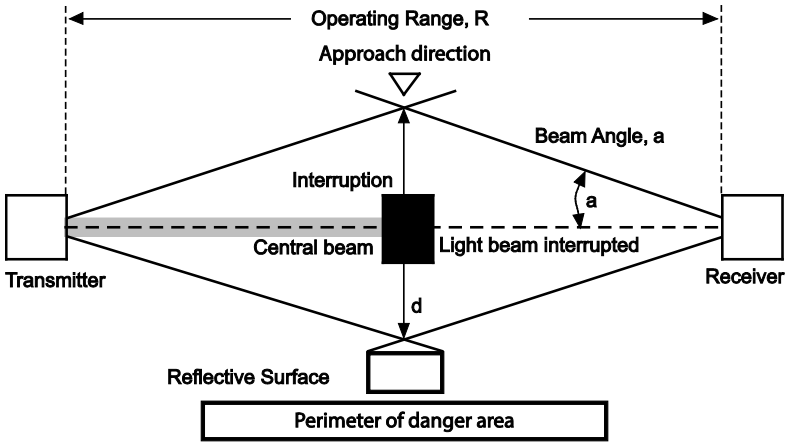

Figure 2-19. Correct Mounting Example with Proper Alignment

In *Figure 2-20*, below, the interruption is not detected because of the reflection. The reflective object is inside the beam angle.

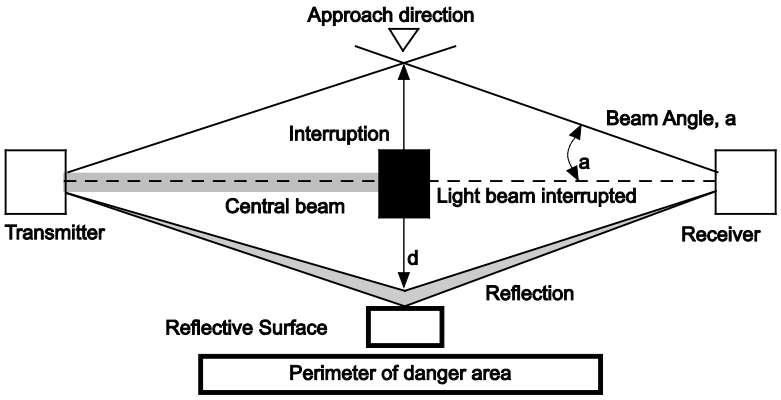

Figure 2-20. Unsafe Mounting, Example 1

In *Figure 2-21*, below, the interruption is not detected because of the reflection. Reflective surface interference may also occur above and below the sensing field.

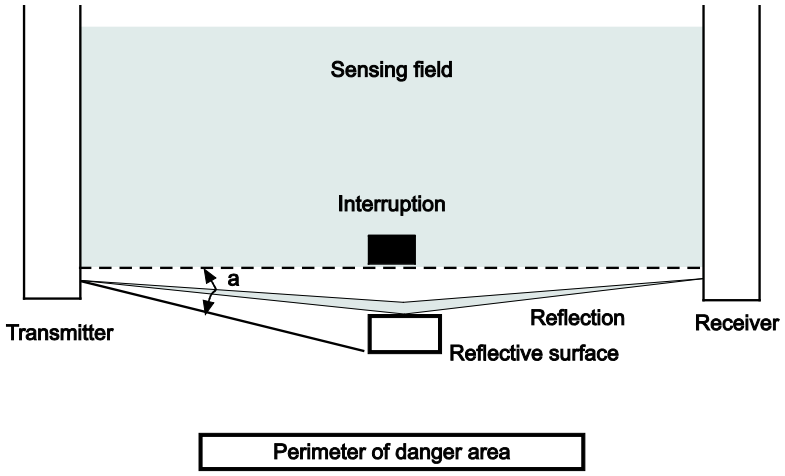

Figure 2-21. Unsafe Mounting, Example 2

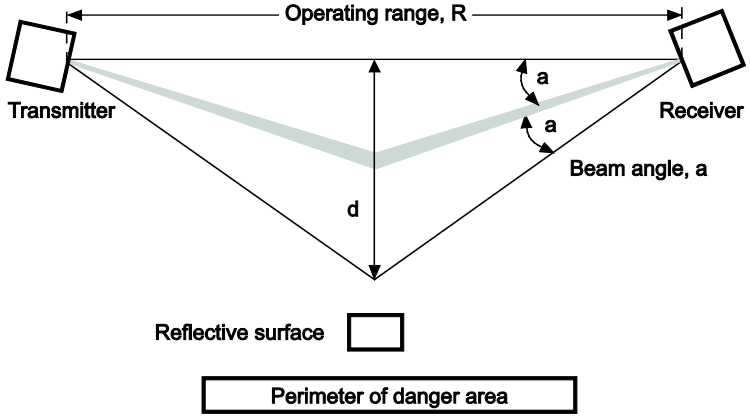

Figure 2-22. Minimum Distance: Worst Case Alignment Example

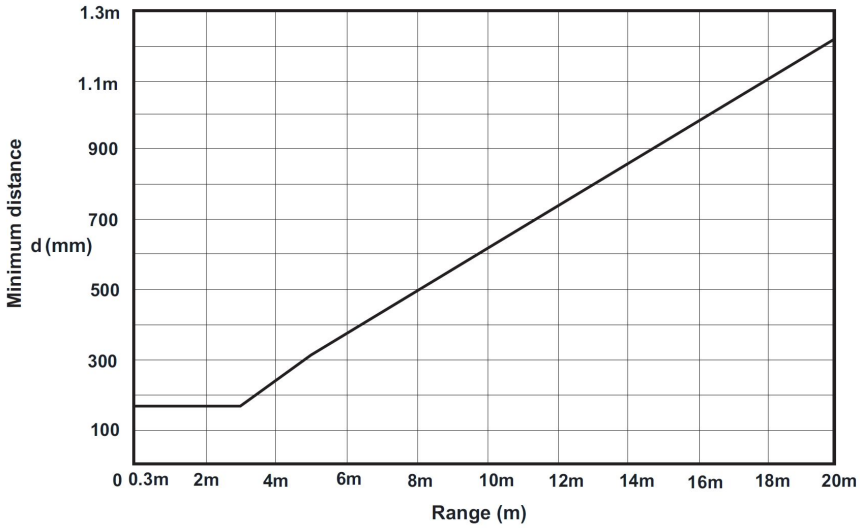

Figure 2-23. Minimum Distance from a Reflective Surface as a Function of Range

Preventing Cross Talk between Two Pairs of Shadow 9 Heads

⚠ DANGER

PREVENT INTERFERENCE BETWEEN SETS OF SHADOW 9 HEADS

When using more than one set of Shadow 9 in adjacent areas, the emitter of one Shadow 9 may interfere with the receiver of the other, causing the safety functions to stop working properly.

Install and configure them so that mutual interference does not occur.

Failure to comply with these instructions will result in death or serious injury.

When using more than 1 set of Shadow 9 in adjacent areas, the emitter of one Shadow 9 may interfere with the receiver of the other, causing the safety functions to stop working properly.

Install and configure them so that mutual interference does not occur.

Normally, the phototransistors in the Shadow 9 receiver do not respond to other light sources, accepting only infrared light pulses of a certain duration in proper sequence. However, in cases where two pairs of Shadow 9s are located in close proximity to each other, light from the LEDs in the transmitter of one pair may be detected by the phototransistors in the receiver of the other pair. This is called “cross talk.”

Cross talk may occur when one pair of Shadow 9s is mounted horizontally next to a vertical pair to detect an operator between the vertical pair of heads and the pinch point. Cross talk may also occur when guarded machines are close together, the light from the transmitter on one press being detected by the receiver on the other press.

There are several ways to prevent cross talk:

- Insert an opaque barrier, such as a blind, between the two pairs of Shadow 9 heads. Make sure that the barrier runs all the way from the transmitter to the receiver.
- Reverse the position of the transmitter and receiver on the second press, as shown in *Figure 2-24*.
- Set different scan codes for adjacent pairs of light curtains using the option DIP switches on the first transmitter and receiver (see *Setting Scan Code DIP Switches*, page 83).
- Reduce the scanning range to its lower setting (see *Setting Scanning Range DIP Switches*, page 84).

These solutions can be used singly or in combination.

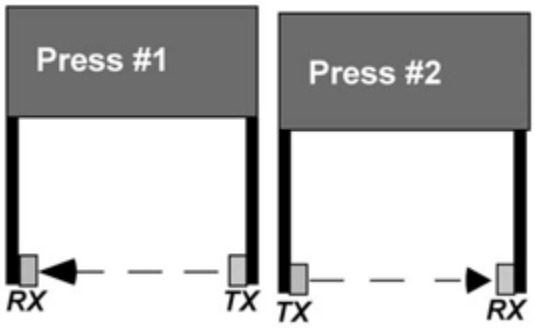

Figure 2-24. Reversing Transmitters (TX) and Receivers (RX) to Prevent Cross Talk

Loosely Mounting Shadow 9 Transmitter and Receiver

Perform the following steps to loosely mount transmitter and receiver, referring to *Figure 2-6*, page 52, and Figure 2-16, page 59.

Locate four mounting holes for each head either on your brackets or on a solid surface (see *Planning Your Light Curtain Installation*, page 47). Shock mount studs come in two sizes: 10-32 for 9.4-in. through 36.2-in. heads, 1/4-20 for 47.2-in. and 59.8-in. heads. For installation onto a solid surface, use a No. 21 drill and a 10-32 tap or a No. 7 drill and a 1/4-20 tap. For through-installation onto a metal bracket, drill clearance holes.

Before mounting the optic heads, install four shock mounts for each head. Thread a shock mount into each of the four tapped holes in the mounting surface, or use a washer and nut to secure each shock mount to a metal bracket.

Using washers and nuts, loosely mount the optic heads onto the shock mounts as shown in Figure 2-25. Mounting Shadow 9 with Standard Brackets, below.

Follow the instructions in the next section to complete the installation. Align and adjust the heads (see *Initial Installation: Aligning and Tightening Down Shadow 9 Heads*, page 87) after you mount and wire the control.

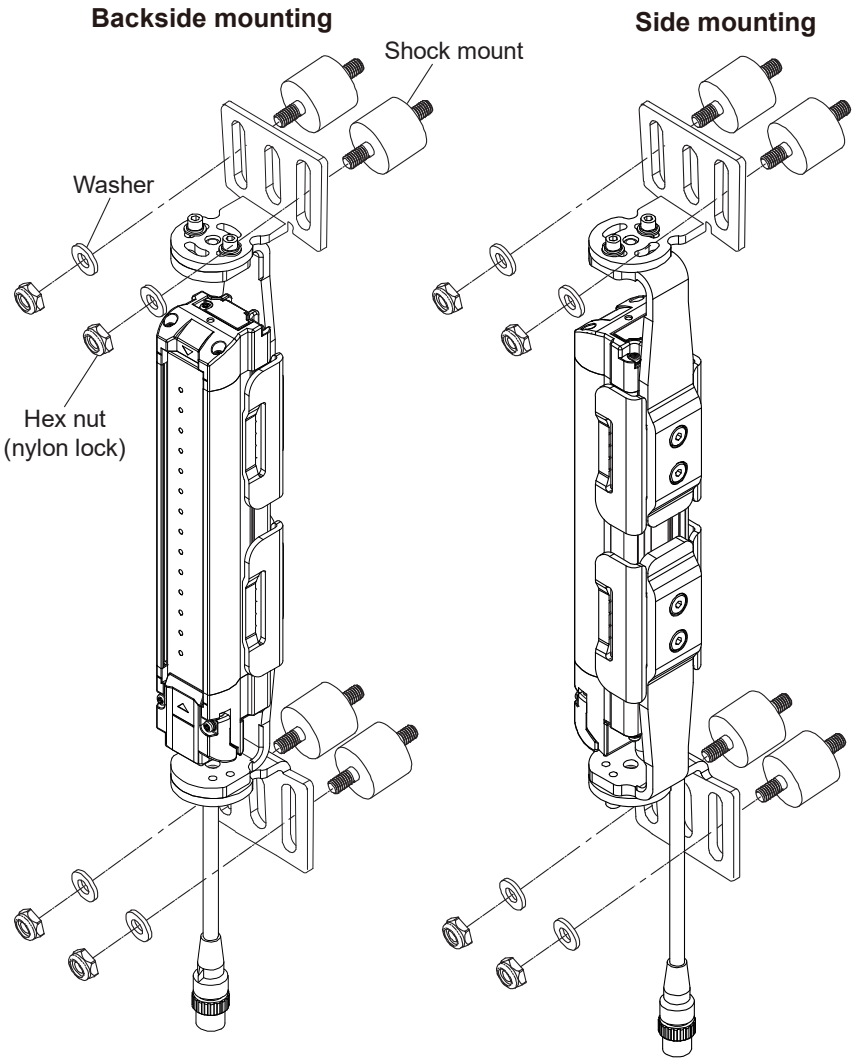

Figure 2-25. Mounting Shadow 9 with Standard Brackets

Mounting the Optional Shadow 9 Control

⚠ DANGER

DO NOT MOUNT CONTROL WHERE IT CAN AFFECT LIGHT CURTAIN OPERATION

Install the light curtain control in a location where access to it will not affect the operation of the light curtain.

Failure to comply with these instructions will result in death or serious injury.

⚠ DANGER

DO NOT INSTALL CONTROL INSIDE THE GUARDED AREA FOR PERIMETER GUARDING

Install the light curtain control outside the guarded area for perimeter guarding applications.

Failure to comply with these instructions will result in death or serious injury.

Choose an appropriate location when mounting the optional Shadow 9 control box. The control should be mounted in a location where personnel can easily turn the Program/Run/Start key switch

and see the warning indicators without interfering with the operation of the light curtains. The control must never be installed inside the protected area in perimeter guarding applications. The enclosure can be mounted to the press, on a free- standing pedestal, on a pendant, or at the entrance of a location used for area guarding.

Once you have selected a mounting location, drill eight holes for mounting, and tap, if necessary. Shock mount studs are 1/4-20. Mount the enclosure using the enclosed shock mounts. Use a No. 7 drill and 1/4-20 tap. Refer to *Figure 2-26*, below, for mounting dimensions.

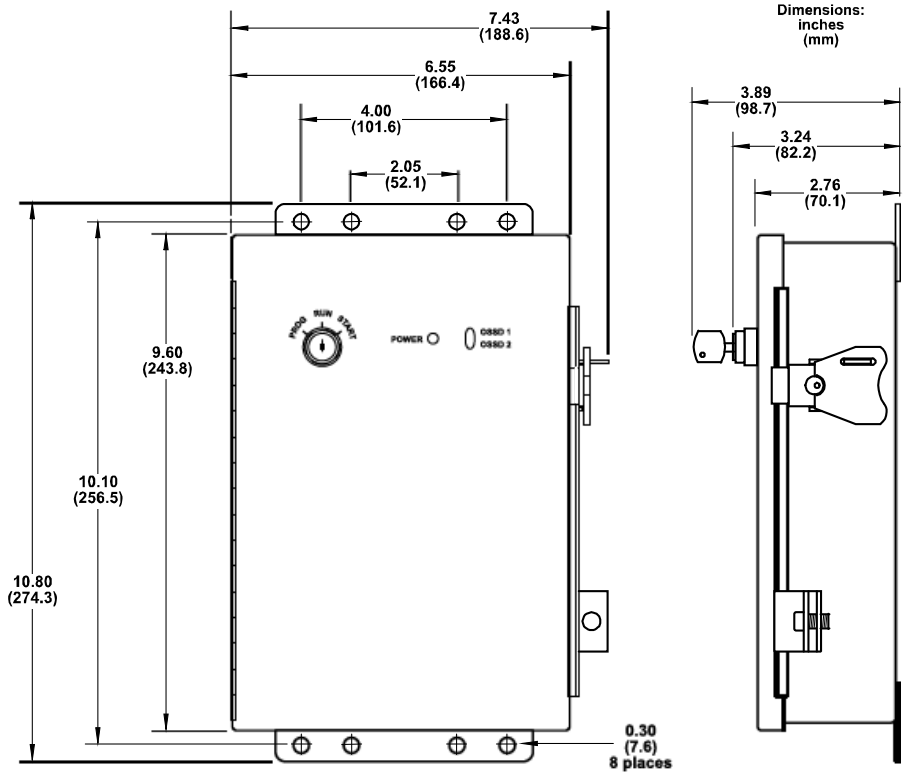

Figure 2-26. Shadow 9 Control Box: Mounting Dimensions

Wiring First Pair of Optic Heads to the Control

⚠ DANGER

DO NOT USE SHADOW LIGHT CURTAINS ON FULL-REVOLUTION POWER PRESSES

- DO NOT use Shadow 9 safety light curtains on full-revolution clutched machinery, which cannot be stopped in mid-stroke.
- Use Shadow 9 safety light curtains only on machinery that can be stopped at any point in the stroke or cycle.

Failure to comply with these instructions will result in death or serious injury.

⚠ DANGER

PREVENT PRESS FROM BEING ABLE TO MOVE AFTER INTRUSION

- Ensure that Shadow 9 is wired to the emergency stop circuitry of the press.
- Ensure that any stop initiated by the light curtain is an immediate stop, one that occurs immediately after the stop signal is sent to the machinery. (If the light curtain is wired by mistake to the top-stop circuitry, the press continues its stroke until it reaches the top of the stroke, even after an intrusion or obstruction is detected.)

Failure to comply with these instructions will result in death or serious injury.

⚠ DANGER

AVOID WIRING STOP CIRCUITS THAT ARE NON-OPERATIVE IN SOME MODES

Wire the light curtain to your press control circuit so the stop signal from the light curtain stops the machine immediately in all modes of operation, including Inch.

Failure to comply with these instructions will result in death or serious injury.

⚠ DANGER

AVOID WIRING OTHER DEVICES TO SHADOW 9 POWER

Wire only the Shadow 9 light curtain heads to the Shadow 9 control box. **Do not** wire any other device to the control box or its power supply.

Failure to comply with these instructions could result in death or serious injury.

⚠ WARNING

GUARD AGAINST ELECTRIC SHOCK HAZARD

- Ensure that the power source is off before you make any wiring connections.
- Turn off and disconnect power from the Shadow 9 safety light curtain and from the machinery it is connected to, including the machine control and motor, before making any wiring connections.
- Ensure that all procedures are performed by qualified personnel.

Failure to comply with these instructions could result in death or serious injury.

To wire a pair of heads, transmitter and receiver, to the optional Shadow 9 control, perform the following steps, referring to *Figure 2-27*, page 70, and Figure 1 at the end of the manual for wiring connections:

1. Plug the two quick-disconnect cables into the pigtail connectors on transmitter and receiver (the connection is keyed), and twist the locknut until the connection is tight. The transmitter cable is gray and the receiver cable is black.

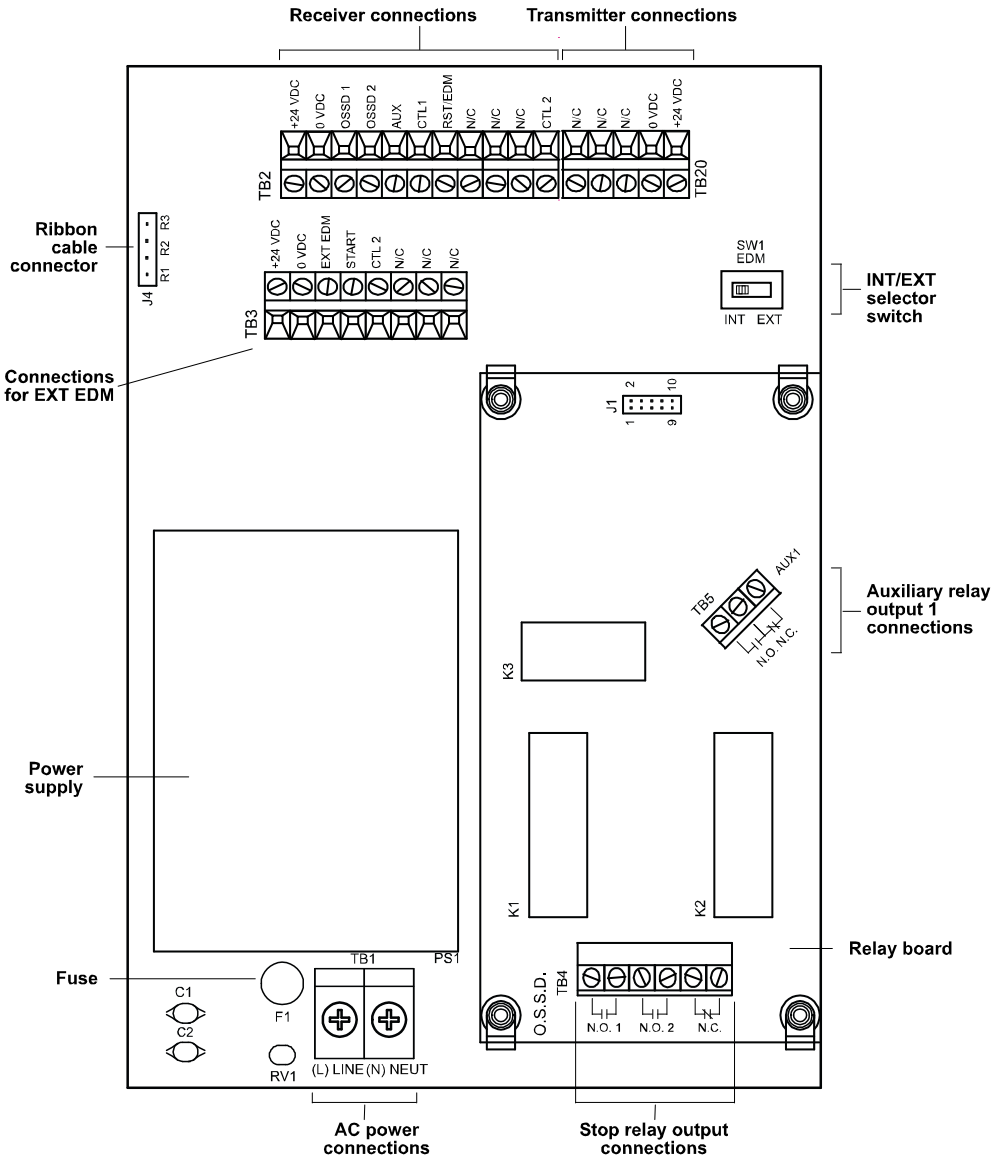

Figure 2-27. Shadow 9 Control Main Board: Location of Important Components

NOTICE

When joining cables with quick-disconnect fittings, be sure to make the connections between the two cables as tight as you can make them by hand. Do not use tools such as wrenches or pliers to tighten quick-disconnects.

2. Run the cables from the transmitter and receiver to the knockouts in the top of the control. The receiver cable will be inserted into the top center knockout, the transmitter cable into the top right knockout. If you want to install cabling in liquid-tight conduit.

3. Open the control by pulling up on and turning the hinge to unlock the clasp.

4. Locate terminal blocks TB2 (receiver) and TB20 (transmitter) on the Shadow 9 control main board (see *Figure 2-27*, page 70).

5. Measure the wires to fit and cut the wires as necessary. Allow 4 1/2 in. at the end of the cable jacket for connections at the control.

6. Thread the receiver cable through the hole in the top of the plastic gland nut (see *Figure 2-28*), then through the hole in the tapered end of the threaded coupling. Slide both components well down the cable so they are out of the way.

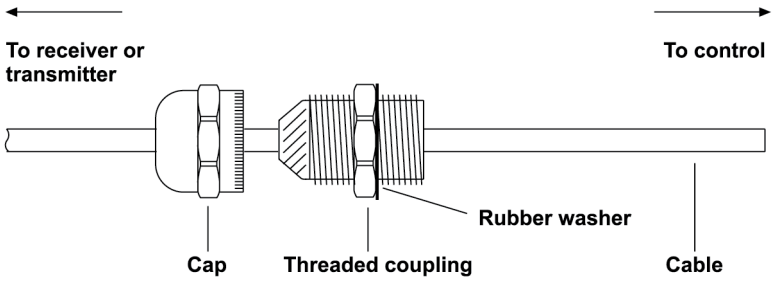

Figure 2-28. Cable Being Threaded through Top of Gland Nut and Threaded Coupling

NOTICE
When removing insulation, be careful not to cut into the conductors.

7. Remove the first 4 1/2 in. of black PVC cable jacket insulation.

NOTICE
When tightening the gland nut cap and coupling, make sure to turn cap and coupling in opposite directions at the same time.

8. Slide the gland nut cap and threaded coupling down the cable (toward the control) until the end of the coupling is flush with the point at which you cut the cable jacket. Thread the cap onto the coupling, and tighten the two components by hand, securing the cable as you do so.

9. Tighten the cap onto the coupling, using a 1 1/16 in. (27 mm) wrench.

10. Remove 3/16 to 1/4 in. of insulation from the ends of each conductor wire, using a wire stripper.

11. Insert the gland nut coupling through the top center knockout of the control box.

12. From inside the control, thread the 1 1/16 in. locknut through the bundle of connectors until it contacts the coupling, then tighten the nut onto the threads with your hands.

13. Tighten the nut securely with a 1 1/16 in. (27 mm) wrench.

14. Connect receiver wires to terminal block TB2 on the Shadow 9 control main board, as shown in *Table 2-4*, below, and Figure 1 at the end of the manual.

Table 2-4. First Receiver Wiring Connections

Wire Color	Signal Label (TB2)
Brown	+24 Vdc
Blue	0 Vdc
Black	OSSD 1
White	OSSD 2
Red	AUX
Black (factory installed)	CTL1
Yellow	RST/EDM
–	N/C
–	N/C
–	N/C
Gray	CTL2

N/C indicates no connection

15. Repeat steps 6-13 for the transmitter cable.
16. Connect transmitter wires to terminal block TB20 on the Shadow 9 control main board, as shown in Table 2-5 and Figure 1 at the end of the manual.

Table 2-5. First Transmitter Wiring Connections

Wire Color	Signal Label (TB20)
–	N/C
–	N/C
–	N/C
Blue	0 Vdc
Brown	+24 Vdc

N/C indicates no connection

17. When you have finished, double-check all connections.

NOTICE

Make sure the end caps are correctly installed on the transmitter and receiver for a standalone pair of heads. For cascaded pairs of heads, make sure the end caps are correctly installed on the last pair of heads in the cascade.

End caps protect connectors from oil and other contaminants.

18. If you are using a single pair of transmitter and receiver heads, make sure the end caps are securely installed and retained with the captive screw.

Connecting Cascaded Heads

After you have wired one pair of heads (transmitter and receiver) to the Shadow 9 control, you can connect one or two additional pairs of heads in series with them to create a cascade. Cascaded heads can be connected to the first-connected heads or to another pair of cascaded heads. Each pair of heads can be a different length.

NOTICE

Install end caps on the connectors of the last pair of heads in a cascade. End caps protect the connectors from contaminants. Also, if end caps or a state indicator lamp is not installed on the last pair of heads, a fault condition will result.

NOTICE

Be sure the small gasket on the cascading connector is present and correctly placed.

If adjacent cascaded heads are close enough to each other, you can use the 11.8-in. (300 mm) pigtails and 7.8-in. (200 mm) cascading cables to connect them. For heads farther apart, use interconnect cables between the pigtails and cascading cables. See *Specifications*, page 29 for the available lengths of interconnect cables.

NOTICE

Use only one interconnect cable to wire one receiver or transmitter to the next cascaded head. Do not use multiple interconnect cables in series.

⚠ DANGER

You must cycle power to the light curtains after installing cascaded pairs of heads in order for Shadow 9 to recognize the new heads.

Failure to comply with these instructions will result in death or serious injury.

To connect pairs of cascaded heads, do the following:

1. Remove power from Shadow 9 and any attached machinery.
2. Loosen the captive screws in the end caps on the first transmitter and receiver.
3. Plug the appropriate cascading cables into the connectors from which you removed the end caps and secure by tightening the screws in the cascading connectors.
   - If the cascaded head is close enough to the previous head, plug its pigtail quick disconnect connector into the quick disconnect on the cascading cable.
   - If the cascaded head is farther away from the previous head, plug an interconnect cable into the cascading cable on one end and the cascaded head's pigtail on the other.

NOTICE

Use only one interconnect cable to wire one receiver or transmitter to the next cascaded head. Do not use multiple interconnect cables in series.

NOTICE

When joining cables with quick-disconnect fittings, be sure to make the connections between the two cables as tight as you can make them by hand. Do not use tools such as wrenches or pliers to tighten quick-disconnects.

NOTICE

When you remove an end cap, store it in a safe place for later use.

4. To add another pair of cascaded heads, repeat this procedure from step 2. You can connect up to three pairs of heads in a cascade.
5. Apply power to the light curtains. If your Shadow 9 is operating in Start/Restart Interlock mode, turn the Program/Run/Start key switch to START and release it to reset the light curtain.

Connecting AC Wiring to the Optional Shadow 9 Control

⚠ WARNING

GUARD AGAINST ELECTRIC SHOCK HAZARD

- Ensure that the power source is off before you make any wiring connections.
- Turn off and disconnect power from the Shadow 9 safety light curtain and from the machinery it is connected to, including the machine control and motor, before making any wiring connections.
- Ensure that all procedures are performed by qualified personnel.
- Complete all installation procedures before connecting wires to the AC power source.

Failure to comply with these instructions could result in death or serious injury.

The control is wired to a 115-230 Vac @ 30 VA power source. In bringing AC wiring to the control, follow these guidelines:

- All wires can be run through flexible liquid-tight conduit provided all circuits are in the same voltage range. If your emergency stop circuits are low voltage circuits (such as 24 Vdc), run two conduits–for instance, one for 115 Vac wires and one for 24 Vdc wires.
- Bring the wiring connections for AC power to a convenient point so that you can connect them to the appropriate connector. No. 16 wire is recommended for these circuits; use No. 14 if local codes require it.

Perform the following steps to connect AC wiring to the Shadow 9 control:

1. Open the door of the control and locate terminal block TB1 on the Shadow 9 control main board in the lower left corner of the enclosure (see *Figure 2-27*, page 70). This is the connector for AC power.

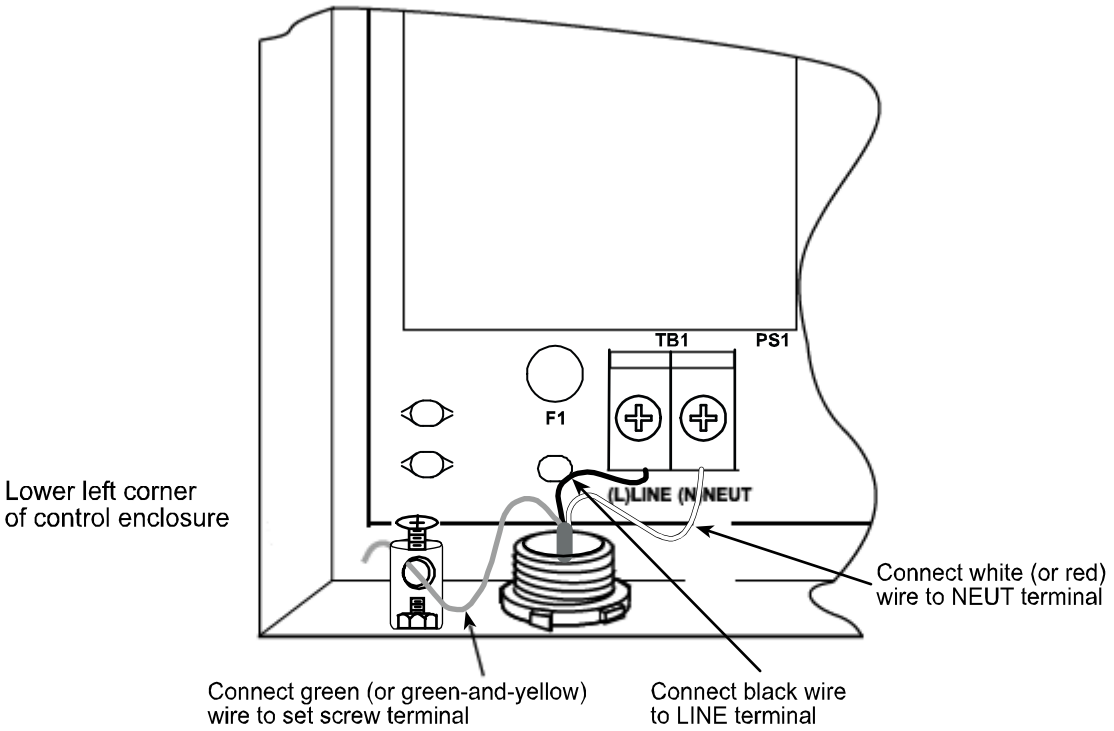

Figure 2-29. Shadow 9 AC Wiring Connections

2. Determine how you will bring wiring from your 115 Vac power source (or 230 Vac source, if applicable) to the appropriate knockout at the bottom of the unit. These wires should be connected directly to the press control transformer. For 115 Vac, you need three wires— high (black), neutral (white) and ground (green). For 230 Vac, high and neutral wires are black and red, the ground wire green or green-and-yellow.

3. Run the power wires to the control box. If your stop circuits are 115 Vac, the AC wiring and stop circuits will be run through the same flexible, liquid-tight conduit and will enter the enclosure ideally through the bottom middle knockout. If the stop circuits are 24 Vdc, then 115-230 Vac wiring will enter through the bottom left knockout and the 24 Vdc wires through the bottom right knockout. To maintain the control box's IP65 rating, you must use conduit of the same rating and make proper connections to the control.

4. Remove the knockout(s) you plan to use for your AC wiring and stop circuits. Left and center knockouts are combo units (0.875 in. (22.2 mm) ID, 1.13 in. (28.7 mm) OD); right knockout is 0.875 in. (22.2 mm) diameter. You remove the inner disk in the combo knockouts from inside the control box, the outer diameter from outside the control box. The right knockout is removed from outside the box. To remove a knockout, tap with a hammer and screwdriver around the circumference of the disk. When removing the inner disk of a combo knockout, be sure the control box is well-supported.

5. Connect the black wire to the "L" terminal on TB1, the white (or red) wire to the "N" terminal, as shown in *Figure 2-27*, page 70, and in Figure 2 at the end of the manual.

6. Connect the green (or green-and-yellow) electric service ground wire to the set screw terminal on the bottom of the enclosure, as shown in *Figure 2-27*, page 70.

7. Leave a service loop at the control to allow for later adjustment of the conduit. Cut the wires as necessary.

⚠ WARNING

GUARD AGAINST ELECTRIC SHOCK HAZARD

Do not connect wires to AC power source until you are done with all other installation procedures.

Failure to comply with these instructions could result in death or serious injury.

Connecting Stop Circuits to the Control

⚠ DANGER

DO NOT USE SHADOW LIGHT CURTAINS ON FULL-REVOLUTION POWER PRESSES

- DO NOT use Shadow 9 safety light curtains on full-revolution clutched machinery, which cannot be stopped in mid-stroke.
- Use Shadow 9 safety light curtains only on machinery that can be stopped at any point in the stroke or cycle.

Failure to comply with these instructions will result in death or serious injury.

⚠ DANGER

PREVENT PRESS FROM BEING ABLE TO MOVE AFTER INTRUSION

- Ensure that Shadow 9 is wired to the emergency stop circuitry of the press.
- Ensure that any stop initiated by the light curtain is an immediate stop, one that occurs immediately after the stop signal is sent to the machinery. If the light curtain is not correctly wired in this way, the press may continue its stroke after an intrusion is detected.

Failure to comply with these instructions will result in death or serious injury.

⚠ DANGER

AVOID WIRING STOP CIRCUITS THAT ARE NON-OPERATIVE IN SOME MODES

Wire the light curtain in series with your press control circuit so the stop signal from the light curtain stops the machine immediately in all modes of operation, including Inch.

Failure to comply with these instructions will result in death or serious injury.

⚠ WARNING

GUARD AGAINST ELECTRIC SHOCK HAZARD

- Ensure that the power source is off before you make any wiring connections.
- Turn off and disconnect power from the Shadow 9 safety light curtain and from the machinery it is connected to, including the machine control and motor, before making any wiring connections.
- Ensure that all procedures are performed by qualified personnel.

Failure to comply with these instructions could result in death or serious injury.

Wiring the control into your press's emergency stop or equivalent circuitry ensures that whenever an obstruction or intrusion is detected, the press will stop as quickly as its clutch/ brake system (or other system) will permit.

Follow these guidelines when making connections:

- Bring the wiring connections for the emergency stop circuits to a convenient point so that you can tie them to the appropriate connector. No. 16 wire is recommended for these circuits. No. 14 should be used if local codes require it.

- Determine how you will connect the wires from the control to your press control emergency stop circuit. Refer to Figures 2, 3, and 4 at the end of this manual and your press control manual or other electrical prints. You need two wires for the emergency stop circuit.
- If your stop circuits are 115 Vac, the AC wiring and stop circuits will enter the control in the same conduit through the bottom middle knockout (see *Connecting AC Wiring to the Optional Shadow 9 Control*, page 74). If the stop circuits are 24 Vdc, then 115-230 Vac wiring goes through the bottom left knockout, 24 Vdc wiring through the bottom right knockout.

Wiring Shadow 9 in a Single Normally Open (N/O) Emergency Stop Circuit

If your machine has only a single, Normally Open (N/O) emergency stop circuit, connect the Shadow 9 safety relays in series with the machine's emergency stop circuit. Perform the following steps:

1. Locate terminal block TB4 on the Shadow 9 control main board (see *Figure 2-27*, page 70).
2. Connect pins #1 and #4 on TB4 in series with the stop circuits on the press, and place a jumper between pins #2 and #3, as shown in *Figure 2-30*, page 77, and in Figure 2 at the end of the manual.
3. When you have finished wiring the relays, remember to leave a service loop at the control to allow for later adjustment of the conduit. Cut the wires as necessary.

When wiring Shadow 9 into the press circuit, you should ensure that the light curtain is active in all modes of operation. This includes Inch, Single-stroke, and Continuous. Following this practice will provide safety for setup personnel as well as the operator. In some cases, having Shadow 9 active in all modes may even eliminate the need for lockout during a die change. See OSHA 1910.147 "Lockout/Tagout" for details.

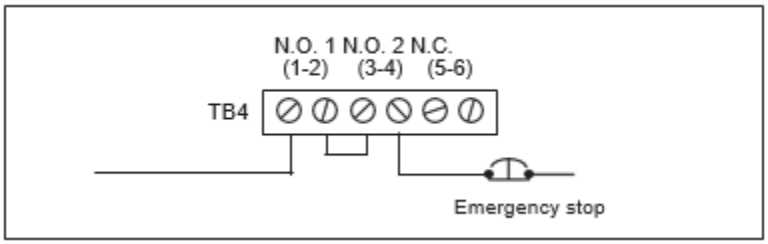

Figure 2-30. Relays Wired to Emergency Stop Circuit, N/O Configuration

Wiring Shadow 9 to EDM Monitor Inputs

⚠ DANGER

ENSURE THAT EDM INSTALLATION IS SUITABLE FOR SAFETY USE

- Install EDM relays in pairs as instructed in this manual (see Figures 3 and 4 at end of manual).
- Use only relays with forced guided type contacts for EDM monitoring.
- Ensure that the response time of the EDM circuitry is 300 ms or less.
- Use only the safety outputs for personnel protection.

Failure to comply with these instructions will result in death or serious injury.

NOTICE

SEE SPECIAL INSTRUCTIONS FOR EDM SETTING WHEN SHADOW 9 WIRED DIRECTLY TO WPC 1000 OR 2000

Refer to *Appendix A– Wiring Shadow 9 Heads Directly to WPC* for correct setting to disable EDM, as required for connections directly to WPC, not using the Shadow control box.

External Device Monitoring (EDM), also called Machine Primary Control Element (MPCE) monitoring, is an important safety function. EDM monitors the Shadow 9 interface to the guarded machine, checking to make sure that the interfacing relays are responding correctly to the light curtain and that there is no inconsistency between the state of relays and that of the Shadow 9 safety outputs.

Connections for EDM monitoring are made at the terminals labelled "EXT EDM" and "0 Vdc" on terminal block TB3 on the main board in the optional Shadow 9 control box (see *Figure 2-27*, page 70). To enable EDM monitoring, you must set switches DIP-SW1-2 and SW2-2 on the first receiver to "ON" (see *ENABLING External Device Monitoring (EDM) DIP Switches*, page 85, and on the Shadow 9 control board, set switch SW1 EDM on the main board in the control as follows:

- If the optional Shadow 9 control is wired directly in series with the machine's E-stop circuit without any external relays, set SW1 EDM to "INT" (see Figure 2 at the end of the manual)
- If the optional Shadow 9 control is wired to external relays, set SW1 EDM to "EXT" (see figures 3 and 4 at the end of the manual)
- If the optional Shadow 9 control is wired to a Wintriss Clutch/Brake Control (see *Wiring Optional Shadow 9 Control to a Wintriss Clutch/Brake Control*, page 79), set SW1 EDM to "INT" (see figures 5 through 8 at the end of the manual).

When Shadow 9 heads are wired directly to a Wintriss Clutch/Brake Control (i.e., there is no optional Shadow 9 control box), the EDM function must be disabled by setting DIP-SW1-2 and DIP-SW2-2 on the first receiver to "OFF" (see figures 9 through 11 at the end of the manual).

In order for the EDM function to monitor the performance of your relays, you must connect the Shadow 9 stop circuits to the interfacing relays (see figures 3 and 4 at the end of the manual) instead of connecting them in series with the machine's immediate stop circuit or with control reliable safety relay modules.

NOTICE

INSTALL SUPPRESSORS IN EDM CIRCUITS

Make sure to install suppressors, as shown in figures 3 and 4 at the end of the manual, when you wire your EDM circuits. Unsuppressed EDM circuits may generate electrical noise, which may cause electronic components not to function properly. See applicable wiring diagrams at end of the manual.

When EDM inputs are wired and enabled, Shadow 9 regularly performs the following checks:

- Whenever Shadow 9 powers up, it looks for an EDM "closed" condition and, if this is found, enters a state consistent with the selected operating mode.
- Whenever Shadow 9 activates its safety outputs, it monitors the EDM for a "closed"-to- "open" transition. This transition must occur within 300 ms or Shadow 9 considers the EDM faulted and enters a Fault Condition state.
- If the EDM connections are incorrectly wired, Shadow 9 enters an OFF state.

Wiring Shadow 9 Optional Shadow 9 Control Box to a PLC

⚠ DANGER

AVOID INCORRECT WIRING TO A PLC

- Ensure that the light curtain control is properly wired to your PLC.
- Follow the guidelines in ANSI standard B11.1. The guidelines below serve as a reminder of the importance of connecting your light curtain correctly when using a PLC. Do not wire the outputs in series when connecting Shadow 9 to a PLC.
- Be aware that the details of wiring and programming the PLC are solely your responsibility, and not Wintriss's.
- Use a single safety PLC or multiple non-safety PLCs.

Failure to comply with these instructions will result in death or serious injury.

When wiring the optional Shadow 9 control to a programmable logic controller (PLC) or other type of microprocessor-based control, two (or more) independent logic systems should be used to control the press's stop circuit. Wintriss does not provide specific step-by-step instructions for connecting Shadow 9s to PLCs. This is because of the variety of PLCs and the various programming techniques used. Only general guidelines are supplied in this section. Refer to figures 3 and 4 at the end of the manual for suggested wiring.

We recommend you carefully study the ANSI guidelines in Appendix D of the ANSI B11.1 standards before connecting Shadow 9 to a PLC. Appendix C of the standards, "Some Considerations for Design of Microprocessor-Based Clutch/Brake Controls," gives detailed guidelines for using PLCs to control the clutch and brake on metal-stamping presses.

To ensure maximum safety, you must wire and program the PLC so it can detect an internal component failure and immediately stop the press. Two of the three outputs from Shadow 9's control relays, labelled "N.O. 1," "N.O. 2," and "N.C." (see Figure 2-30, page 77), must be connected separately to a PLC.

Next, you must create a program that will check independently each input signal from the Shadow 9 relays. The program should stop the press immediately if the input signals ever differ. That way, a component failure within the PLC will be immediately detected. Also, with Shadow 9 relays wired to the PLC separately, if one of Shadow 9's control relay contacts were to weld shut, preventing the stop signal to the PLC, the other relay contact would still open to send the stop signal.

If you do not connect the control to the PLC properly, the PLC will not be able to read the input signals correctly when a component in the PLC fails. Even though Shadow 9 signals a stop, the PLC will not stop the press.

If the control is connected to a PLC instead of directly to the machinery, then the PLC must be able to transfer Shadow 9's control reliability capability to the press stop circuit. If this capability is overridden or if the PLC cannot detect a failure of its own components, much of Shadow 9's protection features are lost even though Shadow 9 is working properly. This is why it is essential that you do not override Shadow 9's control reliability features when using Shadow 9 with a PLC.

Wiring Optional Shadow 9 Control to a Wintriss Clutch/Brake Control

NOTICE

SEE SPECIAL INSTRUCTIONS FOR EDM SETTING WHEN SHADOW 9 WIRED DIRECTLY TO WPC 1000 OR 2000

Refer to *Appendix A– Wiring Shadow 9 Heads Directly to WPC* for correct setting to disable EDM, as required for connections directly to WPC, not using the Shadow control box.

If you are connecting a Shadow 9 optional control to a Wintriss Clutch/Brake Control (WPC), refer to the following figures at the end of the manual for the appropriate wiring diagram for your specific WPC product:

- Figure 5. WPC 2000 and Shadow 9 Control Box Wiring Diagram
- Figure 6. WPC 1000 and Shadow 9 Control Box Wiring Diagram
- Figure 7. WPC II and Shadow 9 Wiring Diagram
- Figure 9. WPC 2000 and Shadow 9 Wiring Diagram
- Figure 10. Dual Shadow 9 WPC 2000 Wiring Diagram
- Figure 11. WPC 1000 and Shadow 9 Wiring Diagram

If you are connecting Shadow 9 optic heads directly to a WPC 2000 or WPC 1000, refer to *Appendix A* for detailed wiring instructions and to figures 9 (WPC 2000) and 11 (WPC 1000) at the end of the manual.

Wiring Auxiliary Output

⚠ DANGER

DO NOT USE NON-SAFETY OUTPUTS FOR SAFETY FUNCTIONS

Use the auxiliary output for non-safety functions only. The auxiliary output cannot protect personnel from a moving hazard.

Failure to comply with these instructions will result in death or serious injury.

Shadow 9 provides one auxiliary output you can use for non-safety applications, such as illuminating a warning beacon on a press during a fault condition or providing a status input to a PLC. *Do not use the auxiliary output for any safety function*.

For the normally open (N.O.) output wire the auxiliary output to pins 1 and 2 on terminal block TB5 on the Shadow 9 Main board. For the normally closed (N.C.) output, wire to pins 2 and 3. See *Figure 2-27*, page 70 and Figure 8 at the end of the manual.

Auxiliary N.O./N.C. contacts operation:

- The AUX 1 NC contacts are closed and NO contacts are open when the OSSD outputs are on.
- The AUX 1 NC contacts are open and NO contacts are closed when the OSSD outputs are off.

Setting Option DIP Switches

CAUTION

OPTION DIP SWITCH ACCESS DOOR MUST BE SCREWED SHUT DURING MACHINE OPERATION

Make sure that the DIP switch access doors on all transmitters and receivers are screwed shut during operation of the guarded machine. Failure to secure access doors during machine operation can result in oil penetration of the optic heads and will void the light curtain warranty.

Failure to comply with these instructions may result in property damage.

CAUTION

USE SCREWDRIVER OF CORRECT SIZE TO SCREW DOWN DIP SWITCH ACCESS DOORS

Use a Phillips screwdriver of the correct size to screw down the DIP switch access doors. Use of too small or too large a screwdriver may damage the screw heads.

Failure to comply with these instructions may result in property damage.

CAUTION

USE SLENDER BLUNT TOOL TO SET OPTION DIP SWITCHES

When setting the option switches to the OFF or ON position, use a tool that is both slender enough to engage an individual switch yet blunt enough not to damage the switch.

Failure to comply with these instructions may result in property damage.

NOTICE

MAKE DIP SWITCH SETTINGS BEFORE INSTALLATION WHEN POSSIBLE

The DIP switches are very small, and it is easier to see and set them before installation. After installation, you can use a lighted magnifying glass when setting the DIP switches.

The DIP switches on the first transmitter and first receiver (shown in their factory default positions in *Figure 2-31*, page 82) allow you to set the following options:

- *Setting Scan Code DIP Switches*, page 83
- *Setting Scanning Range DIP Switches*, page 84
- *ENABLING External Device Monitoring (EDM) DIP Switches*, page 85
- *Setting Operating Mode DIP Switches: Automatic Start or Manual Start (Start/Restart Interlock*, page 86
- *Setting Programmable Fixed Blanking DIP Switches*, page 87

Receiver switches are organized in two blocks, SW1 (labeled “1”) and SW2 (labeled “2”), see *Figure 2-31*. Each pair of SW1 and SW2 switches must be set to the same position (OFF or ON). Otherwise, Shadow 9 generates a DIP switch setting error.

To set the option switches, loosen the retainer screws on the access doors on the first transmitter and receiver, and swing the access doors on their hinges. Move switches to the desired positions, using a slender tool with a blunt tip. When you are finished making settings, swing the doors back to their original positions and screw them down.

NOTICE

Make DIP switch settings only on the first pair of heads in a cascade. Any settings you make on the second or third heads in a cascade are ignored.

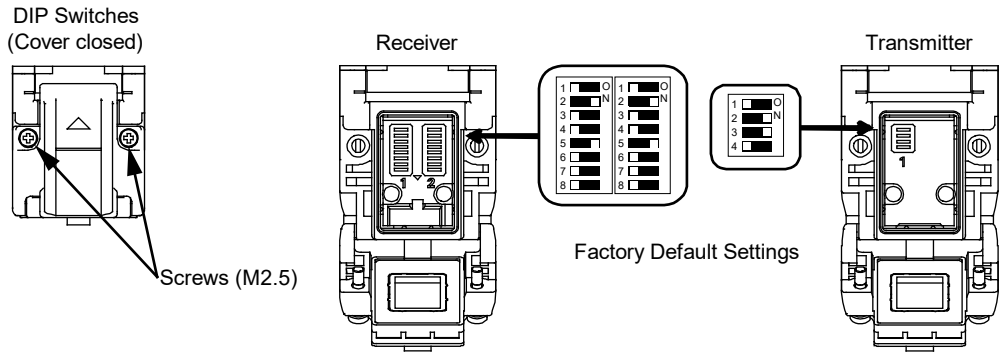

Figure 2-31. Shadow 9 DIP Switches to Set Options

NOTICE

MISMATCHED DIP SWITCH SETTINGS

If in any pair of DIP switches, one is set to ON and one set to OFF, Shadow 9 transitions to LOCKOUT when it is powered on.

Table 2-6. DIP Switch Setting Positions

DIP switch OFF	DIP switch ON
ON	ON

The following functional settings are available by setting DIP Switches on the transmitter and receiver.

Table 2-7. DIP Switches on Transmitter

Position	Function	Setting	Description
1	Scan Code	1 ON	Scan code A (factory default setting)
		1 ON	Scan code B
2, 3	Operating Range Selection	2 ON 3 ON	Short mode
		2 ON 3 ON	Long mode (factory default setting)
4	Not used	4 ON	(OFF – factory default setting)

Table 2-8. DIP Switches on Receiver

Position	Function	Setting		Description
		DIP-SW1	DIP-SW2	
1	Scan Code	1 ON	1 ON	Scan code A (factory default setting)
		1 ON	1 ON	Scan code B
2	External Device Monitoring (EDM)	2 ON	2 ON	Enabled (factory default setting)
		2 ON	2 ON	Disabled
3	Start/Restart INT-LK (interlock)	3 ON	3 ON	Automatic Start (factory default setting)
		3 ON	3 ON	Manual reset (Start/Restart Interlock)
4	Not used	4 ON	4 ON	(OFF – factory default setting)
5	Fixed Blanking	5 ON	5 ON	Fixed blanking enabled (factory default setting)
		5 ON	5 ON	Fixed blanking disabled
6	Floating Blanking	6 ON	6 ON	Floating blanking disabled (factory default setting)
		6 ON	6 ON	Floating blanking enbled
7	Not used	7 ON	7 ON	(OFF – factory default setting)
8	Not used	8 ON	8 ON	(OFF – factory default setting)

Setting Scan Code DIP Switches

(Transmitter DIP Switch 1, Receiver DIP SW1 and DIP SW2 Switch 1)

Scan codes are used to minimize cross-talk between two pairs of light curtains installed near one another. To prevent interference between the two pairs of heads, one pair is set to scan code A, the other to scan code B. The transmitter and receiver in each pair must be set to the same scan code. *Table 2-9* and *Table 2-10* show the DIP switch settings.

Table 2-9. Scan Code DIP Switch Settings: Transmitter DIP Switch 1

Option	Transmitter DIP Switch 1
Scan code A (factory default setting)	OFF
	1 ON
Scan code B	ON
	1 ON

Table 2-10. Scan Code DIP Switch Settings: Receiver DIP-SW1 and DIP-SW2 Switch 1

Option	Receiver DIP-SW1 Switch 1	Receiver DIP-SW2 Switch 1
Scan code A (factory default setting)	OFF	OFF
	1 ON	1 ON
Scan code B	ON	ON
	1 ON	1 ON

Setting Scanning Range DIP Switches

(Transmitter DIP Switches 2 and 3)

Scanning range is the maximum distance between heads at which the LEDs in the transmitter can be read by the phototransistors in the receiver. Transmitter DIP switches 2 and 3 allow you to select long or short scanning ranges for your Shadow 9 heads. The long range option, which is the default setting, is up to 65 ft (20 m). The short range option is up to 23 ft (7 m). Selecting the short range setting can help to prevent cross talk when there are multiple light curtains operating in a small space. *Table 2-11* shows the transmitter DIP switch settings for scanning range.

Table 2-11. Scanning Range DIP Switch Settings: Transmitter DIP Switches 2 and 3

Option	Transmitter DIP Switch 2	Transmitter DIP Switch 3
Short mode	OFF	OFF
	2 ON	3 ON
Long mode (factory default setting)	ON	ON
	2 ON	3 ON

ENABLING External Device Monitoring (EDM) DIP Switches

(Receiver DIP SW1 and DIP SW2 Switch 2)

> **NOTICE**
>
> **DISABLE EDM WHEN SHADOW 9 HEADS ARE WIRED DIRECTLY TO WPC 1000 OR 2000,**
> See *Appendix A – Wiring Shadow 9 Heads Directly to WPC*, page 119.

External Device Monitoring, or EDM, is a safety function that monitors the Shadow 9 interface to the guarded machine, checks to ensure that the control elements are responding correctly to the light curtain, and detects any inconsistency between the two external control devices. EDM detects any malfunction within the interface that prevents a stop signal from reaching the machine controller. *Table 2-12* shows selector switch settings for EDM.

Table 2-12. External Device Monitor (EDM) DIP Switch Settings: Receiver DIP-SW1 and DIP-SW2 Switch 2

Option	Receiver DIP-SW1 Switch 2	Receiver DIP-SW2 Switch 2
EDM Enabled (factory default setting)	**ON**	**ON**
	2 ▬□ ON	**2 ▬□ ON**
EDM Disabled	**OFF**	**OFF**
	2 □▬ ON	**2 □▬ ON**

If you enable EDM by setting DIP-SW1 Switch 2 and DIP-SW2 Switch 2 to "ON," you must also set SW1 EDM on the main board in the optional Shadow 9 control box (see *Wiring Shadow 9 to EDM Monitor Inputs*, page 77) as follows:

- If the optional Shadow 9 control is wired directly in series with the machine's E-stop circuit without any external relays, set SW1 EDM to "INT" (see Figure 2 at the end of the manual)
- If the optional control is wired to external relays, set SW1 EDM to "EXT" (see figures 3 and 4 at the end of the manual)
- If the optional control is wired to a Wintriss Clutch/Brake Control, set SW1 EDM to "INT" (see figures 5 through 7 at the end of the manual).

> **NOTICE**
>
> **WHEN SHADOW 9 HEADS ARE WIRED DIRECTLY TO WPC, SET EDM TO "DISABLED"**
> If you have wired the first Shadow 9 transmitter and receiver to a WPC 1000 or WPC 2000 control, you must disable the EDM function, setting receiver DIP switches SW1 and SW2 switch 2 to OFF (see *ENABLING External Device Monitoring (EDM) DIP Switches*, page 85, and figures 9, and 11 at the end of the manual).

Setting Operating Mode DIP Switches: Automatic Start or Manual Start (Start/Restart Interlock)

(Receiver DIP SW1 and DIP SW2 Switch 3)

Shadow 9 can be set to operate in either Automatic Start (default) or Manual Reset operating mode (see *Setting Operating Mode*, page 100). *Table 2-13* shows operating mode option switch settings.

Table 2-13. Operating Mode, Automatic Start-Start/Restart Interlock Settings: Receiver DIP Switches 3

Option	Receiver SW1 Switch 3	Receiver SW2 Switch 3
Automatic Start (factory default)	OFF	OFF
	3 ☐▬ ON	3 ☐▬ ON
Manual Reset (Start/Restart Interlock)	ON	ON
	3 ▬☐ ON	3 ▬☐ ON

Setting Programmable Fixed Blanking DIP Switches

(Receiver DIP-SW1 and DIP-SW2 Switch 5)

See *Programming a Fixed Blanking Window*, page 101, for a discussion of programmable fixed blanking and instructions for programming a fixed blanking window. *Table 2-14* shows the DIP switch settings for enabling/disabling programmable fixed blanking. The factory default setting is "enabled."

Table 2-14. Programmable Fixed Blanking DIP Switch Settings: Receiver DIP-SW1 and DIP-SW2 Switch 5

Option	Receiver DIP-SW1 Switch 5	Receiver DIP-SW2 Switch 5
Fixed blanking enabled (factory default setting)	ON	ON
	5 ▬☐ ON	5 ▬☐ ON
Fixed blanking disabled	OFF	OFF
	5 ☐▬ ON	5 ☐▬ ON

Setting Floating Blanking DIP Switches

(Receiver DIP-SW1 and DIP-SW2 Switch 6)

See *Setting a Floating Blanking Window*, page 104, for a discussion of floating blanking and instructions for setting a floating blanking window. *Table 2-15* shows the DIP switch settings for floating blanking.

Table 2-15. Floating Blanking DIP Switch Settings: Receiver DIP-SW1 and DIP-SW2 Switch 6

Option	Receiver DIP-SW1 Switch 6	Receiver DIP-SW2 Switch 6
Floating blanking disabled (factory default setting)	OFF	OFF
	6 ON	6 ON
Floating blanking enabled	ON	ON
	6 ON	6 ON

Connecting AC Wiring to Power Source

If you have connected your light curtains to the optional Shadow 9 control, check to make sure that all connections are secure and that all conduits are in place before connecting AC power. Leave the transmitter and receiver loosely mounted. Then, connect the 115 Vac wires from the control to the 115 Vac source. Make sure power is off before making connections.

Initial Installation: Aligning and Tightening Down Shadow 9 Heads

⚠ DANGER

TURN OFF HAZARDOUS EQUIPMENT DURING ALIGNMENT

Remove power from the press and other hazardous machinery while you are aligning the light curtain transmitter and receiver.

Failure to comply with these instructions will result in death or serious injury.

NOTICE

AFTER INITIAL INSTALLATION, DISABLE FIXED BLANKING WINDOWS WHEN ALIGNING THE HEADS

Any time you perform the alignment procedure after you first install and align the heads, disable fixed blanking windows by setting the receiver DIP switches 5 to OFF (see Setting Option DIP Switches, page 81 and Setting Programmable Fixed Blanking DIP Switches, page 86).

If you installed the brackets in the same horizontal and vertical plane (see *Aligning Brackets*, page 59), alignment of your Shadow 9 optic heads should be relatively easy. When the TOP, STB and BTM LEDS located on the Receiver (see Figure 2-32, below), are illuminated (not blinking) the

heads are aligned well enough to operate. However, for best results, align your Shadow 9 heads as precisely as possible. Even a slight bump can knock an imprecisely aligned head out of alignment.

When Shadow 9 heads are out of alignment, one or more transmitter beams are not detected by the receiver. This causes the Shadow 9 safety relays to open and stay open. The press is emergency stopped and cannot be restarted. The ON/OFF LED on the first receiver illuminates red.

The consecutive beam rule, which applies to blanking windows (see page 103), requires that 2 consecutive beams must remain unblanked on each pair of heads and the first pair of heads must have the top and/or bottom beam unblanked, as well. The consecutive beams rule ensures that each pair of Shadow 9 transmitter and receiver can synchronize its sequencing (see *Shadow 9 Operation*, page 22).

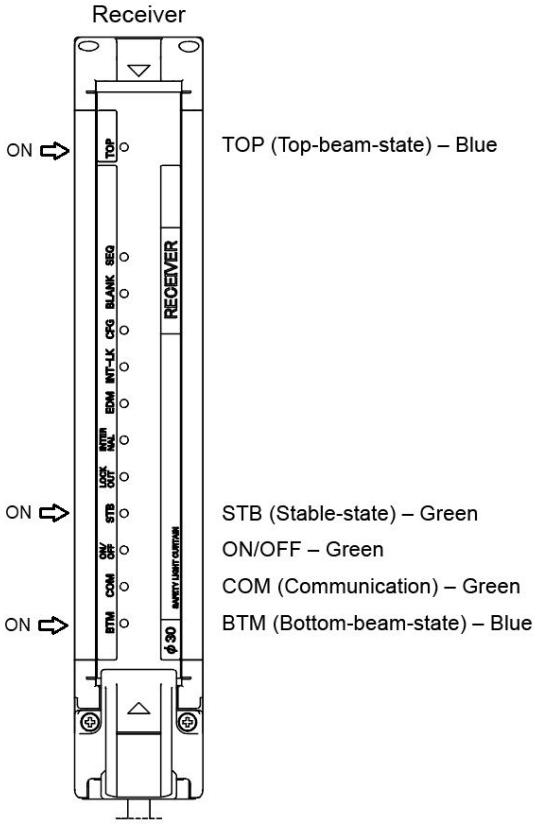

Figure 2-32. Indicator LEDs on First Receiver Showing Alignment

To align Shadow 9 heads, perform the following steps:

1. Make sure DIP switches on the first receiver are set so Shadow 9 is in the Automatic Start Mode (SW 3 both OFF). See *Setting Operating Mode DIP Switches: Automatic Start or Manual Start (Start/Restart Interlock)*, page 86.

NOTICE

Before you perform the alignment procedure, be sure no blanking windows are set. New heads have fixed blanking enabled by their factory setting, but do not have blanking windows set. If you have ever programmed blanking windows on these heads, before you align them, disable fixed blanking by setting the receiver DIP switches 5 to OFF (see Setting Option DIP Switches, page 81 and Setting Programmable Fixed Blanking DIP Switches, page 86).

2. Make sure that transmitter and receiver are mounted so the lenses are pointed at each other.

NOTICE

When powering up Shadow 9, do not turn on power to the press.

3. Power up Shadow 9.
4. Make sure the light curtain is unobstructed. Check the status of the following LED indicators on the receiver.
   - TOP (Blue)
   - STB (Green)
   - ON/OFF (Green)
   - COM (Green)
   - BTM (Blue)

   When these LEDs are illuminated (not blinking) the heads are aligned
5. Tighten the mounting hardware on one of the heads so it will not move. Then, watch the LEDs listed in step 4 while you move the other head: swivel it horizontally (Figure 2-33, *below*) and push it up and down vertically to see how tight the alignment tolerances are in order to keep those LEDs illuminated.
6. When you have finished experimenting with alignment tolerances, position the heads for best alignment.
7. Check the accuracy of the alignment by moving the shank of a 1/8-in. screwdriver up and down through the sensing field. Since the diameter of the screwdriver is much smaller than the 1.18-in. object sensitivity of the light curtain, passing this object through the light field should not cause the ON/OFF LED to turn red unless the transmitter and receiver are out of alignment.
8. Firmly tighten the mounting hardware on the transmitter and receiver. Double-check the ON/OFF LED. If it is red, repeat the alignment procedure starting with step 4.

NOTICE

Do not begin press operation until you have completed the checkout sequence.

9. Proceed to the checkout and test procedures starting on page 92.

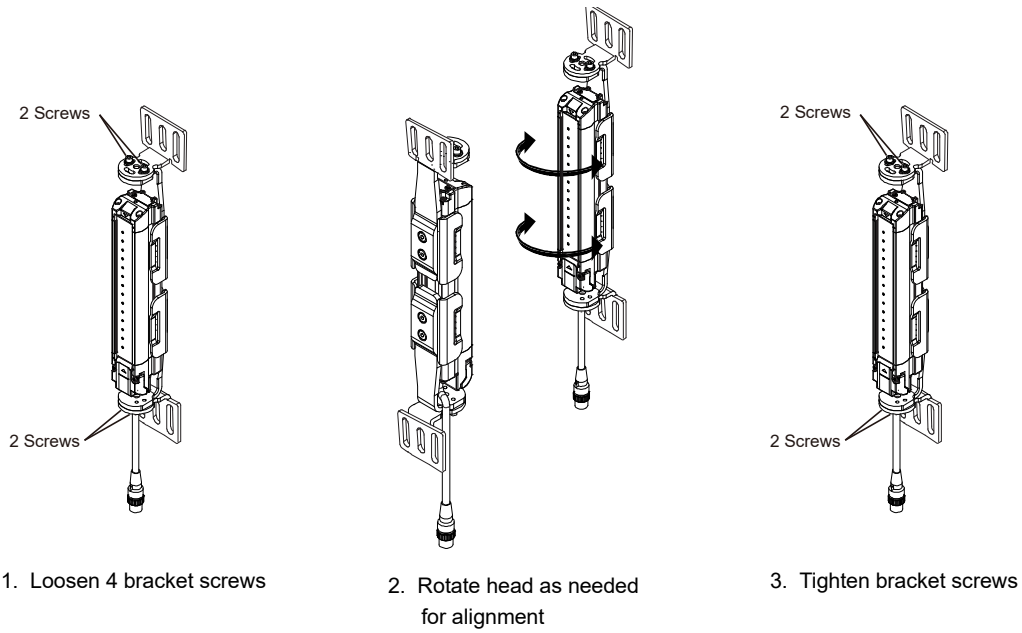

Figure 2-33. Rotating Shadow 9, Standard Mounting Brackets

Diagnosing Problems Before Using Shadow 9

⚠ DANGER

MAKE SURE TO PERFORM SAFETY SYSTEM TESTS

- Perform the checkout and test procedures (see page 92) when you have completed installation of your light curtain and before operating the equipment it is connected to.
- Operate your machinery only after your safety system meets all the requirements of the checkout and test procedures.
- Perform the test procedure whenever repair, maintenance or modification is performed on your light curtain or the machinery it is connected to.

Failure to comply with these instructions will result in death or serious injury.

If your Shadow 9 light curtain does not operate correctly after you have aligned the heads, use the following diagnostic steps to troubleshoot the unit. If you need help, call Wintriss Tech. Support.

No Power to Unit

If the optional Shadow 9 control has no power, check power fuse F1 on the main board (see *Figure 2-27*, page 70) and replace if necessary. Also check that power connections have been made correctly (see *Connecting AC Wiring to the Optional Shadow 9 Control*, page 74).

INT-LK (Interlock) LED Illuminates

When the yellow INT-LK (interlock) LED illuminates, you must turn the Program/Run/Start key switch to START and release it to reset the control to return Shadow 9 to a Curtains Unobstructed state. If you have trouble resetting the control to Curtains Unobstructed, power the system down, then back up. Turn the Program/Run/Start key switch to START and then release it.

ON/OFF LED Not Illuminated Green

If the ON/OFF LED on the first receiver is not illuminated green and there is no object in the light field, dirt on one or both lens windows may be blocking a light beam. Try cleaning the lens windows (see *Checking and Cleaning Lens Windows*, page 114 for instructions).

NOTICE

In a cascade of light curtains, if the ON/OFF LED on the first receiver is red, check whether the minimum number of consecutive beams for that pair of heads are not aligned or are interrupted by a fixed blanking window.

If, after you clean the lens windows, the ON/OFF LED is still not illuminated green, the next step is to bring the optic heads to within 12 in. of each other (but no closer). Unbolt either the receiver or transmitter (whichever is more convenient), take the unbolted unit off its mounting, and hold it directly in front of the other head. You may need to disconnect and reconnect wiring so the heads will reach.

NOTICE

Power down the control before connecting or disconnecting the wires to the heads.

Make sure the lenses are pointed directly at one another and the Shadow 9 heads are mounted in the same horizontal and vertical planes.

- If the ON/OFF LED illuminates green after you have brought the heads close together, there is a problem with your installation. Reread the instructions starting on page *Planning Your Light Curtain Installation*, page 47) to be sure you understand how Shadow 9 heads should be mounted. When you adjust your brackets so they are in the same horizontal and vertical plane, the Shadow 9 transmitter and receiver should align.
- If the ON/OFF LED is not illuminated green after adjusting the mounting brackets, your Shadow 9s probably have an internal problem. Call Wintriss Tech. Support for assistance.

ON/OFF LED Is Green But Machine Won't Start

⚠ WARNING

GUARD AGAINST ELECTRIC SHOCK HAZARD

- Ensure that the power source is off before checking or replacing fuses.
- Turn off and disconnect power from the Shadow 9 safety light curtain and from the machinery it is connected to, including the machine control and motor, before making any wiring connections.
- Ensure that all procedures are performed by qualified personnel.

Failure to comply with these instructions could result in death or serious injury.

If the ON/OFF LED illuminates green, but you cannot start the press, check the stop relays on the relay board on the Shadow 9 control main board (see *Figure 2-27*, page 70), following the instructions in *Checking and Replacing Control Relays in Optional Shadow 9 Control Box*, page 116.

If the light curtains are connected directly to a WPC clutch/brake control, check to make sure that the light curtain output type jumper on the WPC Primary Processor board is set to "PNP" and the light curtain test mode jumper is set to "INT" (for Internal). See the appropriate WPC manual for further details.

Performing Checkout and Test Procedures

⚠ DANGER

MAKE SURE TO PERFORM SAFETY SYSTEM TESTS

- Perform the checkout and test procedures when you have completed installation of your light curtain and before operating the equipment it is connected to.
- Operate your machinery only after your safety system meets all the requirements of the checkout and test procedures.
- Perform the checkout procedure at least once every three months. Perform the procedure more frequently if machine usage and company guidelines require.
- Perform the test procedure whenever repair, maintenance or modification is performed on your light curtain or the machinery it is connected to.

Failure to comply with these instructions will result in death or serious injury.

⚠ DANGER

CHANGE IN STOPPING TIME REQUIRES SAFETY DISTANCE ADJUSTMENT

- Repair your machinery stopping mechanism if its stopping time increases beyond the acceptable limit.
- Re-calculate the light curtain safety distance, using the new stopping time.
- Adjust the location of the light curtain(s) accordingly.
- Perform the test procedure before operating the equipment.

Failure to comply with these instructions will result in death or serious injury.

You must perform checkout and test procedures to make sure Shadow 9 is working properly before using the light curtains with your machinery.

Checkout Procedure

The following checkout procedure must be performed by qualified personnel during initial Shadow 9 installation and, after installation, at least once every three months or when you make any change to the machine or light curtain. The procedure should be performed more frequently if machine usage and company guidelines require. (See *Appendix B* for a form you can use to document the results of the checkout procedure.)

1. Verify that the guarded machine is a type that may be used with the Shadow 9 system (see the Requirements page at the beginning of the manual).

2. Verify that the mounting distance of the Shadow 9 heads is equal to or greater than the minimum safe distance from the danger point (see *Calculating the Safety Distance*, page 36).

3. Determine that all access to the danger point not protected by the Shadow 9 system is guarded by other means, such as gates, fencing, or other approved methods. Verify that all additional guarding devices are installed and operating properly.

4. If you are using programmable fixed blanking, refer to *Programming a Fixed Blanking Window*, page 99, and make sure the blanking feature is properly configured and any required supplemental guarding is in place.

5. Make sure the operator is not able to stand between the Shadow 9 sensing field and the machine danger point. Verify that the light curtain can be reset only from a position outside the hazardous machine area and within view of the hazardous machine area.

6. Inspect the electrical connections between the guarded machine's control system and the Shadow 9 system. Verify that wires are properly connected to the machine so that a stop signal from the Shadow 9 system results in an immediate halt of the machine's cycle (see *Connecting Stop Circuits to the Control*, page 76).

7. Record the test results in the machine log.

Test Procedure

The following test procedure must be performed by qualified personnel during initial Shadow 9 system installation, according to the employer's regular inspection program, and after any maintenance, adjustment, or modification to the Shadow 9 system or the guarded machine. (See *Appendix C* for a form you can use to document the results of the test procedure.) Testing ensures that the light curtain, safety system, and machine control system work together to properly stop the machine. Failure to test properly could result in serious injury to personnel.

To test the Shadow 9 system, use an opaque cylindrical object of the correct diameter. (1.18 in. or 30 mm). You should also test Shadow 9 alignment using the shank of a 1/8-in. (3.2 mm) screwdriver. If one-beam floating blanking is enabled, use an opaque test bar of 2.05 in. (52 mm) diameter.

1. Disable the guarded machine. Apply power to the Shadow 9 system.

2. Visually inspect the machine to ensure that the only access to the hazardous area is through the Shadow 9 sensing field. If there are other access points, additional guarding, including mechanical barriers, may be required. Verify that all additional guarding devices and barriers are installed and operating properly.

3. If you are using programmable fixed blanking, refer to *Programming a Fixed Blanking Window*, page 99, and make sure the blanking feature is properly configured and any required supplemental guarding is in place.

4. Verify that the mounting distance of the Shadow 9 system is equal to or greater than the calculated minimum safety distance from the hazardous area (see *Calculating the Safety Distance*, page 36). Ensure that the operator is not able to stand undetected between the light curtain and the hazard.

5. Check for signs of external damage to the light curtain, the machine, and the electrical cables and wiring. If damage is found, lock the machine off and report to the supervisor.

NOTICE

FLOATING BLANKING SHOULD BE DISABLED DURING TEST

Floating blanking should be disabled when you perform the test procedure with the 1.18-in. test bar. Later you will enable floating blanking and repeat the test with a user-supplied 2.05-in. bar.

6. Interrupt the Shadow 9 sensing field with the shank of a 1/8-in. (3.2 mm) screwdriver to check the unit's alignment. Move the test object inside the perimeter (along the top, sides, and bottom) of the sensing field and up and down through the center of the sensing field, as shown in *Figure 2-34*. The ON/OFF LED on the first receiver should be illuminated green.

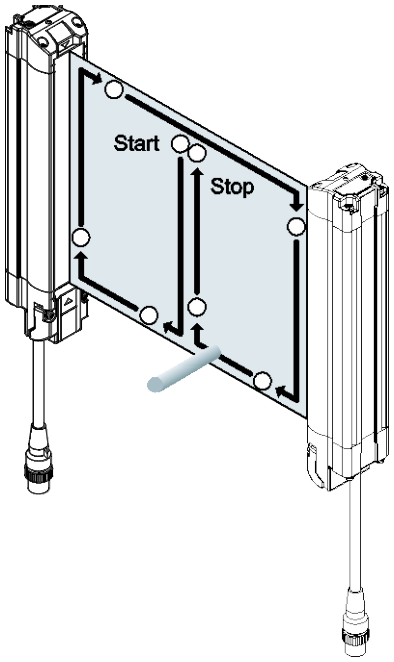

Figure 2-34. Test Object Pattern

If the ON/OFF LED becomes illuminated red, the heads are misaligned. Align the heads precisely before proceeding to step 6.

7. Interrupt the Shadow 9 sensing field with the 1.18-in. (30 mm) test object, using the pattern described in step 5. Verify that the ON/OFF LED illuminates red while the test object is anywhere in the sensing field.

   If Shadow 9 is in Start/Restart Interlock mode, verify that the ON/OFF LED illuminates red (Curtains Obstructed) and the yellow INT-LK (interlock) LED illuminates. Turn the Program/Run/Start key switch to START, hold it a few seconds, and release before proceeding to step 7.

8. Enable the floating blanking option (see *Setting a Floating Blanking Window*, page 104), and repeat step 6, using the 2.05-in. (52 mm) test object.

9. Start the machine. With the machine in motion, interrupt the sensing field with the test object. The machine should stop immediately. (Never insert the test object into the dangerous parts of the machine.)

10. With the machine at rest, interrupt the sensing field with the test object. Verify that the machine will not start with the test object in the sensing field.

11. Verify that the braking and machine stop systems are working properly in accordance with the machine manufacturer's requirements. If the machine does not stop fast enough, adjust the braking system or increase the distance from the light curtain sensing field to the point of hazard.

12. If the safety devices or the machine fails any of these tests, do not run the machine. Immediately lock out the machine to prevent its use and notify the supervisor.

Adding and Removing Cascaded Heads

⚠ DANGER

MAKE SURE TO PERFORM SAFETY SYSTEM TESTS

- Perform the checkout and test procedures whenever you add or remove cascaded light curtain heads and before operating the equipment they are connected to.
- Operate your machinery only after your safety system meets all the requirements of the checkout and test procedures.
- Perform the test procedure whenever repair, maintenance or modification is performed on your light curtain or the machinery it is connected to.

Failure to comply with these instructions will result in death or serious injury.

⚠ DANGER

ADDITION/REMOVAL OF CASCADED HEADS REQUIRES SAFETY DISTANCE ADJUSTMENT

- Re-calculate the light curtain safety distance whenever adding or removing cascaded heads.
- Adjust the location of the light curtain(s) accordingly.
- Perform the test procedure before operating the equipment.

Failure to comply with these instructions will result in death or serious injury.

Adding Cascaded Heads

⚠ DANGER

You must cycle power to the light curtains after installing cascaded pairs of heads; otherwise, Shadow 9 will not recognize the new heads.

Failure to comply with these instructions will result in death or serious injury.

Whenever you add cascaded heads to your Shadow 9 system, perform the following steps:

1. Perform one of the two procedures documented in the *Connecting Cascaded Heads,* page 73.
2. Recalculate the safety distance, and reposition the light curtains accordingly.
3. Perform checkout and test procedures as instructed starting on page 92.

Removing a Cascaded Pair of Heads

⚠ DANGER

DO NOT LEAVE ANY SIDE OF MACHINE UNPROTECTED

- If you remove a pair of cascaded heads, make sure that you install an alternative means of safeguarding that side of the machine. Follow the machine guarding requirements of OSHA 1910.217, ANSI B11.1, ANSI B11.19, and any other regulations and standards that apply.
- Ensure that guarding is properly installed to prevent access to the machine over, under, or around any guarding device.
- If you do not install alternative safeguarding, you must Lockout/Tagout the press.

Failure to comply with these instructions will result in death or serious injury.

Whenever you disconnect a pair of cascaded heads from another light curtain pair or pairs, you must perform the following procedure. Otherwise, the remaining light curtain pairs will not work.

1. Power down Shadow 9.
2. For each pair of heads you remove:
   a. On both heads, unscrew and disconnect the pigtail connector from the interconnect cable or cascading cable that connects it to the head upstream.
   b. On the upstream heads, loosen the captive screws and disconnect the cascading cables from the upstream heads.
   c. Plug in end caps and secure with the captive screws on the heads you just removed cascading cables from.
3. Power up Shadow 9.
   If on power up you see the following LED indicators, this means that the end caps are not correctly installed.

   First receiver:
   TOP: Blinks Blue
   ON/OFF: Illuminates Red
   LOCKOUT: Blinks Red

   Make sure the end caps are correctly plugged in and secured in the last pair of heads in the cascade. Then, cycle power to Shadow 9
4. Recalculate the safety distance and reposition the light curtains accordingly.
5. Perform checkout and test procedures as instructed starting on page 92.

Chapter 3 – Operation

NOTICE

The "first transmitter" or "first receiver" is the one connected to the WPC or the optional Shadow 9 control box, whether in a cascade or a standalone pair of heads.

This chapter tells how to

- Interpret the LED indicators on the Shadow 9 first transmitter and first receiver and the optional Shadow 9 control
- Use the LED indicators to determine Shadow 9's operating state
- Set the Shadow 9 operating mode
- Program a fixed blanking window
- Enable floating blanking

Shadow 9 LED Indicators

Shadow 9 LED indicators on transmitter, receiver, and the optional Shadow 9 control box provide information about light curtain operation. See *Figure 3-1*, page 98, *Table 3-1*, page 98 and *Table 3-2*, page 99.

- LEDs on the transmitter and receiver indicate operating state and settings (see *Figure 3-1*, page 98; *Table 3-1*, page 98, and *Table 3-2*, page 99).
- Power and safety relay LEDs on the cover of the optional Shadow 9 control box (see *Figure 1-3*, page 21)

LEDs on the first receiver provide information about Shadow 9 operation (see *Table 3-2*, page 99, and *Shadow 9 Operating States*, page 99), including:

ON/OFF LED (Green/Red)–
Green: Light curtains unobstructed, both safety relays "closed" (energized)
Red: Light curtains obstructed, both safety relays "open" (de-energized)
Red blinking: Lockout state due to Safety Output error, or error due to abnormal power supply or noise.
The state of the INT-LK (interlock) LED (see next item) indicates the cause of the red ON/OFF LED.

- INT-LK (interlock) LED (Yellow)–

  Yellow: Interlock state

- Blanking LED (Green)–
  Green: Programmable fixed blanking and/or floating blanking feature has been enabled.
  Green blinking: Blanking programming in progress.

Errors are documented, including suggested remedies for each, in Chapter 4 of this manual – *Troubleshooting*, page 107.

The green Power LED indicator on the cover of the optional Shadow 9 control box illuminates when power is applied to the control. The two green safety relay LEDs, labelled “OSSD 1” and “OSSD 2,” are illuminated when the safety relays are “closed,” or energized. When the safety relays are “open,” or de-energized, these two LEDs turn off.

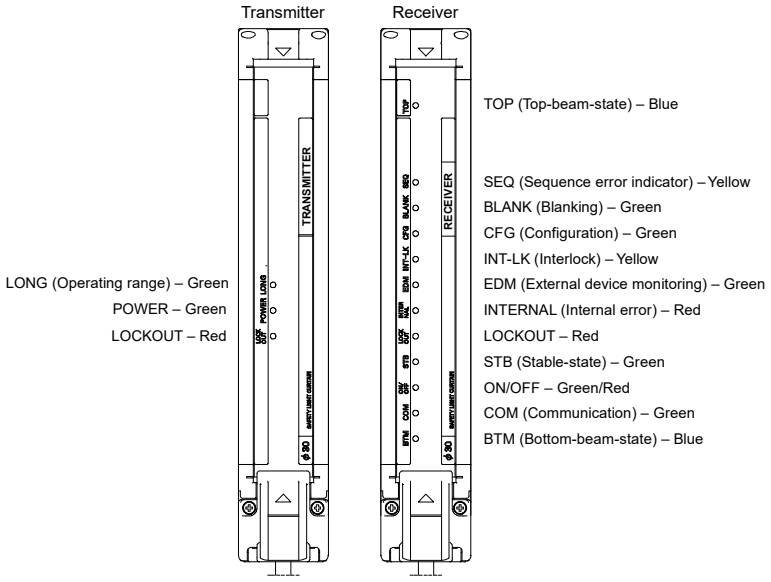

Figure 3-1. Shadow 9 LED Indicators

Table 3-1. LED Indicators on Transmitter

Name	Label	Color	Illuminated	Blinking
Operating range	LONG	Green	Long range mode is selected	Lockout state due to DIP Switch setting error or operating range selection setting error
Power	POWER	Green	Power is ON.	Error due to noise
Lockout	LOCKOUT	Red	–	Lockout state due to error in transmitter

Table 3-2. LED Indicators on Receiver

Name	Label	Color	Illuminated	Blinking
Top-beam-state	TOP	Blue	The top beam is unblocked	Lockout state due to end cap error or other optic head error
Sequence error indicator	SEQ	Yellow	–	Blanking programing error
Blanking	BLANK	Green	Blanking is enabled	Blanking is being programmed
Configuration	CFG	Green	–	Blanking is being programmed or lockout state due to cascading configuration error
Interlock	INT-LK	Yellow	Interlock state	–
External device monitoring	EDM	Green	Reset input is in ON state	Lockout state due to EDM error
Internal error	INTERNAL	Red	–	Lockout state due to Internal error, or error due to abnormal power supply or noise
Lockout	LOCKOUT	Red	–	Lockout state due to error in receiver
Stable-state	STB	Green	Incident light level is 170% or higher of ON-threshold	Safety output is instantaneously turned OFF due to ambient light or vibration
ON/OFF	ON/OFF	Green	Safety output is in ON state	–
		Red	Safety output is in OFF state, or the sensor is in Setting state	Lockout state due to Safety Output error, or error due to abnormal power supply or noise
Communication	COM	Green	Synchronization between transmitter and receiver is maintained	Lockout state due to Communication error, or error due to abnormal power supply or noise
Bottom-beam state	BTM	Blue	The bottom beam is unblocked	Lockout state due to DIP Switch setting error

Shadow 9 Operating States

Shadow 9 can be in one of five operating states, which are specified by the LED indicators on the first receiver:

- **Curtain Unobstructed (Machine Run)**
  The ON/OFF LED illuminates green and the two safety relays are “Closed” (energized) The protected machine is allowed to operate. Turning the Program/Run/Start key switch to START has no effect.
- **Curtain Obstructed (Machine Stop)**
  The ON/OFF LED illuminates red and the two safety relays are “Open” (de-energized) The

protected machine is not allowed to operate. Turning the Program/Run/Start key switch to START has no effect.

- **Interlock**
  The ON/OFF LED illuminates red, the yellow INT-LK (interlock) LED illuminates, the two safety relays are "Open" (de-energized). The Interlock state can be cleared only when the sensing field is free of obstructions and the Program/Run/Start key switch is turned to the START position, held there a few seconds, and released (see Figure 1-3, page 18).
- **Fault Condition**
  The ON/OFF LED illuminates red, the red LOCKOUT LED blinks, and the two safety relays are "Open" (de-energized). The Fault Condition state clears only when you correct the problem that caused the Fault Condition and then either cycle power to Shadow 9 or turn the Program/Run/Start key switch to START, hold for a few seconds, and release it.
- **Blanking Object Removed**
  The green Blanking LED illuminates, the ON/OFF LED illuminates red, the two safety relays are "Open" (de-energized). The protected machine is not allowed to operate. To clear this state, replace the object in its original position or program a new blanking window with a different object or no object.

Setting Operating Mode

You can set Shadow 9 to operate in one of two modes: Automatic Start or Start/Restart Interlock. Set DIP switches on the receiver to select the operating mode. See *Setting Operating Mode DIP Switches: Automatic Start or Manual Start (Start/Restart Interlock*, page 86.

Automatic Start

In Automatic Start operating mode, Shadow 9 powers up with its safety relays "open," performs a system initialization test and a self-test, and, if no internal faults are encountered and no obstructions are present in the sensing field (or a programmable fixed blanking pattern is satisfied), the system enters the Curtains Unobstructed state (see *Shadow 9 Operating States*, page 99). When an object is detected in the sensing field, Shadow 9 changes from Curtains Unobstructed to Curtains Obstructed. After the object has been cleared, Shadow 9 automatically switches to the Curtains Unobstructed state.

Start/Restart Interlock

In Start/Restart Interlock operating mode, Shadow 9 powers up with its safety relays "open," performs a system initialization test and a self-test, and, if no internal faults are encountered and no obstructions are present in the sensing field (or a programmable fixed blanking pattern is satisfied), the system enters the Interlock state. To switch to Curtains Unobstructed, with the sensing field unobstructed or a programmable fixed blanking pattern satisfied, turn the Program/Run/Start key switch to the START position, hold it there for a few seconds, and release it.

When an object is detected entering the sensing field in the Curtains Unobstructed state, Shadow 9 changes from Curtains Unobstructed to Interlock. Shadow remains in the Interlock state after the object has been cleared until you turn the Program/Run/Start key switch to the START position, hold it there for a few seconds, and release it. Shadow 9 switches to Curtains Unobstructed. If the key switch is turned to START when there is an object in the sensing field, Shadow 9 remains in Interlock.

Operating mode settings are made on option switches DIP-SW1 switch 3 and DIP-SW2 switch 3 on the first receiver (see *Setting Operating Mode DIP Switches: Automatic Start or Manual Start (Start/Restart Interlock*, page 86.

NOTICE

On the first receiver, you must set both of each pair of DIP switches to the same position. If a pair of switches is not set the same, a fault condition is generated.

The factory default setting, Automatic Start, has DIP switches SW1 switch 3 and SW2 switch 3 set to OFF. To select the Start/Restart Interlock operating mode, set DIP switches SW1 switch 3 and SW2 switch 3 to ON.

Programming a Fixed Blanking Window

⚠ DANGER

OBSERVE CORRECT SAFETY DISTANCE WHEN USING BLANKING WINDOWS

- Ensure that the correct safety distance exists between the light curtain and the hazardous area. See *Calculating the Safety Distance*, page 36 for detailed information on object sensitivity, depth penetration factor, and OSHA and ANSI safety distance formulas.
- Add 5.38 in. (136.6 mm) to the calculated safety distance for a one-beam fixed blanking window; add 2.69 in. (68.3 mm) for a one-beam floating window (see *Increasing Safety Distance to Compensate for Blanking Windows*, page 43).
- When more than one beam is programmed as a fixed blanking window, and the blanked area is not completely obstructed, the depth penetration factor is at least 36 in. (0.91 m).
- You do not have to change the safety distance if the blanked area is entirely blocked by a fixture from the transmitter to the receiver so that operator intrusion into this area is impossible.

Failure to comply with these instructions will result in death or serious injury.

⚠ DANGER

PREVENT UNAUTHORIZED PERSONNEL FROM PROGRAMMING FIXED BLANKING WINDOWS

A method of supervisory control, such as use of a key switch, must be employed to limit access to Shadow 9's programmable fixed blanking feature so that only a qualified person is able to program a fixed blanking window.

Failure to comply with these instructions will result in death or serious injury.

⚠ DANGER

ENSURE THAT FIXED AND FLOATING BLANKING FUNCTIONS ARE USED CORRECTLY

When the fixed blanking function is used, observe the following. Failure to do so may cause a person to go undetected, resulting in serious injury.

- A responsible person must verify that a test rod is detected for all detection zones except the blanked area.
- When the fixed blanking function is used, install a protective structure to cover the whole blanked area in order to prevent access to the hazardous area through the blanked area.

Perform an inspection for all pairs of Shadow 9 heads, according to the checkout procedure in Appendix B. In cascade installations, perform an inspection for every connected pair of heads.

Failure to comply with these instructions will result in death or serious injury.

Shadow 9 allows you to program an area within the sensing field into which a stationary fixture or other object protrudes without triggering a Curtains Obstructed state and stopping the guarded

machine. This programmed area, which is created by disabling the beams that normally protect it, is called a fixed blanking window. Fixed blanking windows may span any number of beams, but you must leave at least two consecutive beams unblanked on each pair of light curtain heads; also, on the first pair of heads the top and/or bottom beams must remain unblanked.

When using fixed blanking, make sure that all unobstructed areas of the blanking window are protected by supplemental guarding so that the operator has no access to the pinch point through the blanked beams (see *Figure 3-2*, page 103).

Shadow 9's fixed blanking feature is useful in situations where a fixture, conveyor, or other object extends into the sensing field and it is not feasible to move the obstruction. Program a blanking window at the Shadow 9 control or WPC press control for the area of the sensing field penetrated by the object. This disables the light beams that would normally detect the object. Areas above and below the object remain guarded by the light curtain, so if they are penetrated, Shadow 9 sends a stop signal to the machinery.

In order to prevent vibration from activating the light curtain unnecessarily, Shadow 9 has been designed to allow some flexibility in the area covered by programmable fixed blanking windows. Each fixed blanking window has a positional tolerance of ± 1 beam, allowing the object to move up or down by 1 beam without causing a Curtains Obstructed operating state. As a result, when determining the safety distance for a fixed blanking window, you must include an additional beam in your calculations. See *Increasing Safety Distance to Compensate for Blanking Windows*, page 43.

If you program two or more fixed blanking windows on the same head, there must be a minimum of three unblanked beams between the blanked areas to allow vibration in either blanked object.

Fixed blanking is disabled and enabled via DIP switches SW1 and SW2 switches 5 on the first receiver (see *Figure 2-31*, page 82, and *Setting Programmable Fixed Blanking DIP Switches*, page 86). "Fixed Blanking Enabled" is the default setting.

A fixed blanking window is programmed using the Program/Run/Start key switch on the WPC front panel or optional Shadow 9 control. To program a fixed blanking window, follow these steps:

1. Power down Shadow 9.
2. Set Receiver DIP switches number 5 (SW1 and SW2) to ON (the factory setting).
3. Power up Shadow 9.
4. Make sure that the light curtain is correctly aligned, with no blockage. Five LEDS on the receiver must illuminate (without blinking):

   a. TOP (blue)

   b. STB (green)

   c. ON/OFF (green) (If the Start/Restart Interlock mode is ON, and ON/OFF illuminates red, clear by turning the PROG/RUN/START key switch to START, holding it there a few seconds, and releasing it.)

   d. COM (green)

   e. BTM (blue)

5. Put the blockage or blockages in place. The ON/OFF LED illuminates red, the STB LED turns OFF. See *A*, below.
6. Turn and hold the PROG/RUN/START key switch to PROG for five seconds, until BLANK and CFG LEDs blink. Release the key.
7. Quickly flick the PROG/RUN/START key switch to PROG again. The BLANK LED illuminates.
8. Turn and hold the PROG/RUN/START key switch to START for three seconds and release. This completes programming fixed blanking.
9. Check the unblocked area of the light curtain with a 1.18-in. (30-mm) diameter test object and confirm the ON/OFF LED illuminates red.

Additional Requirements:

A. In the first pair of heads, you can blank either the TOP or the BTM (bottom) beam, but not both. In cascaded pairs of heads, you can blank both the TOP and BTM beams. On all pairs of heads, at least 2 consecutive beams must remain unblocked. If these conditions are not satisfied, the CFG LED blinks green, and the SEQ LED blinks yellow, at the same time.

B. If you blank more than 1 window in any pair of heads, leave a minimum of 3 contiguous beams unblanked between windows.

C. All fixed blanking windows must remain obstructed. If the obstruction is removed, the ON/OFF LED illuminates red.

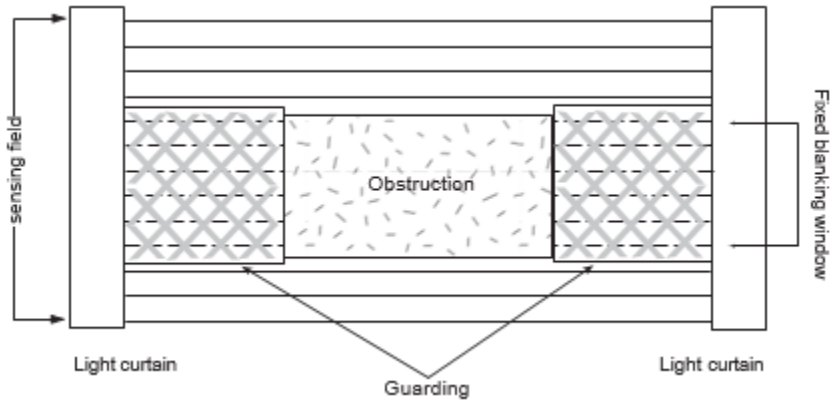

Figure 3-2. Using Supplemental Guarding with Fixed Blanking Windows

Setting a Floating Blanking Window

⚠ DANGER

OBSERVE CORRECT SAFETY DISTANCE WHEN USING FLOATING WINDOW

- Ensure that the correct safety distance exists between the light curtain and the hazardous area. See *Calculating the Safety Distance*, page 36 for detailed information on object sensitivity, depth penetration factor, and OSHA and ANSI safety distance formulas.
- Add 2.69 in. (68.3 mm) to the calculated safety distance for the one-beam floating blanking window (see *Increasing Safety Distance to Compensate for Blanking Windows*, page 43).
- Place the ability to set floating blanking windows under supervisory control to avoid unauthorized usage.

Failure to comply with these instructions will result in death or serious injury.

Shadow 9's floating blanking feature allows you to disable one beam at any location along the length of the light curtain, letting any object 15/16 in. (24 mm) or smaller penetrate the sensing field at random without causing the light curtain to enter a Curtains Obstructed state. In a cascade, if you enable floating blanking, it is enabled in all pairs of heads.

Floating blanking is useful in those applications where material must travel through or within the sensing field at random. A one-beam floating window can be used only when material or parts block no more than 15/16 in. (24 mm) in the sensing field. A larger item would block more than one light beam and cause a stop command to be generated.

Figure 3-3 shows how coil stock interrupts different light beams as the coil unwinds. When one-beam floating blanking is active, the coil may interrupt one beam at a time at any point along the length of the light curtain without triggering an emergency stop of the guarded machine.

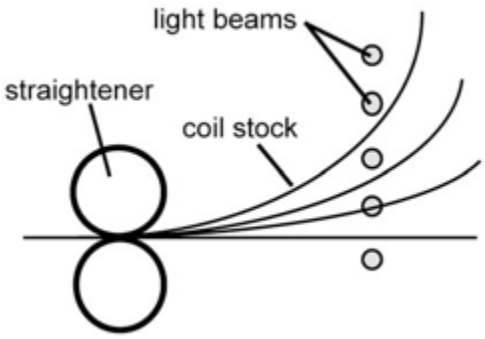

Figure 3-3. Coil Stock Unwinding Using a One-beam Floating Window

A one-beam floating window automatically alters the object sensitivity from 1.18 in. (30 mm) to 2.05 in. (52 mm). If you plan to use this feature even occasionally, the safety distance at which light curtains are mounted must be increased (see *Increasing Safety Distance to Compensate for Blanking Windows*, page 43). When you are using more than one pair of light curtains, you must increase the safety distance for every pair guarding the affected area.

Floating blanking windows are enabled via DIP switches SW1 switch 6 and SW2 switch 6 on the first receiver (see *Setting Floating Blanking DIP Switches*, page 87). When floating blanking has been enabled, the green BLANK LED illuminates on all receivers.

To enable a floating blanking window, do the following:

1. With Shadow 9 in the Curtains Unobstructed state (i.e., ON/OFF LED indicator illuminates green), power down Shadow 9.
2. Set these DIP switches on the first receiver to ON: SW1 switch 6 and SW2 switch 6.
3. Power up Shadow 9.

   If Shadow 9 is in Automatic Start operating mode, the green BLANK LED indicator illuminates. If the mode is Start/Restart Interlock, perform step 4.
4. Turn the Program/Run/Start key switch to START, hold it there a few seconds, and release it. The green BLANK LED illuminates.

Enabling Both Blanking Options

⚠ DANGER

OBSERVE CORRECT SAFETY DISTANCE WHEN USING BLANKING WINDOWS

- Ensure that the correct safety distance exists between the light curtain and the hazardous area. See *Calculating the Safety Distance,* page 36 for detailed information on object sensitivity, depth penetration factor, and OSHA and ANSI safety distance formulas.
- Add 5.38 in. (136.6 mm) to the calculated safety distance for a one-beam fixed blanking window; add 2.69 in. (68.3 mm) for a one-beam floating window (see *Increasing Safety Distance to Compensate for Blanking Windows*, page 43).
- When more than one beam is programmed as a fixed blanking window, and the blanked area is not completely obstructed, the depth penetration factor is at least 36 in. (0.91 m).
- You do not have to change the safety distance if the blanked area is entirely blocked by a fixture from the transmitter to the receiver so that operator intrusion into this area is impossible.
- Place the ability to set floating blanking windows under supervisory control to avoid unauthorized usage.

Failure to comply with these instructions will result in death or serious injury.

NOTICE

The “first transmitter” or “first receiver” is the one connected to the WPC or the optional Shadow 9 control box, whether in a cascade or a standalone pair of heads.

Programmable fixed blanking and floating blanking can be used simultaneously. Both features, for example, can be used in an application where part of the tool physically protrudes into the light field and an air blow-off randomly ejects parts. Program a fixed blanking window for the tool and a floating blanking window for the air-ejected parts.

If you program two fixed blanking windows on the same pair of heads, there must be a minimum of three unblanked beams between the blanked area. A floating blanking window does not affect this requirement.

Chapter 4 – Troubleshooting

⚠ DANGER

PERFORM ONLY AUTHORIZED REPAIRS

- Replace only the power fuse and control relay board.
- Obtain replacement fuse and relay board from Wintriss Controls.
- DO NOT replace any other components. If you do, this will violate the warranty.
- Ensure that repairs are made by qualified personnel. Improper repair by unqualified personnel may put operators at risk of injury.

Failure to comply with these instructions will result in death or serious injury.

CAUTION

DO NOT MAKE OR BREAK CONNECTIONS WITH POWER ON

Power down Shadow 9 before connecting or disconnecting any wiring at the control, transmitter, or receiver.

Failure to comply with these instructions could result in property damage.

NOTICE

The "first transmitter" or "first receiver" is the one connected to the WPC or the optional Shadow 9 control box, whether in a cascade or a standalone pair of heads.

This chapter shows you how to respond to the error conditions and how to test and repair some Shadow 9 components. LEDs on the Shadow 9 first transmitter and/or first receiver indicate what error condition exists.

Shadow 9 has complex electronics. Do not attempt to test or repair components on the Shadow 9 circuit boards unless authorized to do so. Circuit board testing and repair must be performed by technicians trained in Shadow 9 operation.

However, you can perform a few tests and repairs yourself. In many cases, you can get an inoperative Shadow 9 working again by changing a blown fuse, replacing the control relay board, or re-aligning the Shadow 9 heads. If you find serious problems, the defective component (optic head or circuit board) must be factory-repaired. However, when you know which unit is bad, you may be able to substitute another unit for the faulty one until the repairs are made.

Troubleshooting with LED Indicators

If Shadow 9 detects any error, it keeps the safety output OFF and transitions to lockout state. In the lockout state, the lockout LED indicator illuminates or blinks and other LED indicators blink based on the failure.

Solve problems based on the tables below. First, eliminate the cause of the problem. Then, to reset the lockout state, cycle power to the Shadow 9 or turn the PROGRAM/RUN/START key switch to START, hold a few seconds, and release.

When an error occurs, identify it by the combination of LED indicators that illuminate or blink. See the following troubleshooting table.

NOTICE

The optional state indicator lamp gives you an easy-to-see signal of the state of the Shadow 9: OFF (Red), ON (Green), and Misaligned (Yellow). See *Specifications*, page 31.

Table 4-1. LED Indicator Illumination Symbols

Illuminated:	Single blinking:	Double blinking:	OFF:

Table 4-2. LED Indicator Error Combinations in LOCKOUT, Transmitter

Combination of LED Indicators		**Error Description (for remedies, see *Table 4-4*)**
LOCKOUT (Single blinking)	LONG	DIP switch setting error Operating range selection setting error
	POWER	Other sensor error Cascading configuration error Internal error Communication error
LOCKOUT (Double blinking)	POWER	Internal or communication error due to noise

Table 4-3. LED Indicator Error Combinations in LOCKOUT, Receiver

Combination of LED Indicators		**Error Description (for remedies, see *Table 4-4*)**
LOCKOUT (Single blinking)	TOP	End cap error Other sensor error
	CFG	Cascading configuration error
	EDM	External device monitoring error
	INTERNAL	Internal error
	ON/OFF	Safety output error
	COM	Communication error
	BTM	DIP switch setting error
LOCKOUT (Double blinking)	ON/OFF	Safety output error due to power supply voltage or noise
	COM	Communication error due to power supply voltage or noise
	INTERNAL	Internal error due to power supply voltage or noise

Table 4-4. Errors and Remedies

Error (see *Table 4-2* and *Table 4-3*, above)	**Description and Remedy**	**Reference**
End cap error	An end cap may be detached. Attach the cap properly.	
Other sensor error	Other heads being cascaded caused an error. Check the indicators of the heads.	
Cascading configuration error	The cascading cable may be short-circuited, broken, or disconnected. • Check that the cascading cable is tightly connected. • If the cascading cable is broken, replace it.	
	The number of connected sensors or beams may have exceeded the maximum value due to cascading. Check the configuration.	*Connecting Cascaded Heads*, page 73
External device monitoring (EDM) error	Relay may be welded. Replace the relay.	*Checking and Replacing Control Relays in Optional Shadow 9 Control Box*, page 116
	The relay and the Reset (RST) line may not be properly wired. Check the wiring with the relay.	*Wiring First Pair of Optic Heads to the Control*, page 69
	The relay response time may be exceeding the allowable delay time. Change the allowable delay time or replace the relay with one that has an appropriate response time.	*Wiring Shadow 9 to EDM Monitor Inputs*, page 77
Safety output error	Safety output lines may be short-circuited to each other or another signal line may be short-circuited to the safety output line. Wire the safety output lines properly.	*Connecting Stop Circuits to the Control*, page 76
Communication error	The wiring may be broken or short-circuited. Check the cables.	
	Incorrect cables used for cascading heads. Use correct cables from Wintriss.	Chapter 4 Wiring/Installation

Error (see *Table 4-2* and *Table 4-3*, above)	**Description and Remedy**	**Reference**
DIP Switch setting error	A DIP Switch setting may have been changed during operation. Check if a DIP Switch setting was changed or not.	*Setting Option DIP Switches*, page 81
	Settings of two DIP Switches of a receiver may be unmatched. Check whether the setting of two corresponding DIP Switches on the receiver are unmatched.	*Setting Option DIP Switches*, page 81
Operating range selection setting error	The setting of the operating range selection may be incorrect. Check whether the Operating Range Selection of the DIP Switch is properly set.	*Setting Scanning Range DIP Switches*, page 84
Safety output error due to power supply voltage or noise	The power supply voltage may have dropped temporarily when the Shadow 9 is in operation. Check for temporary power supply voltage drop (by about 12 VDC) by the influence of the inductive load, etc. If the exclusive power supply is not used, check the power consumption of other connected devices for enough capacity.	
	Power supply voltage may be outside the rated range. Connect the Shadow 9 to a 24 VDC ±20% power supply voltage.	
	Voltage fluctuation may have occurred due to insufficient power supply capacity. Replace the power supply with one that has a larger capacity.	
	Instantaneous break or instantaneous stop may have occurred due to power sharing with other devices. Do not share the power supply with other devices. Connect the Shadow 9 to a power supply that is dedicated to electro-sensitive protective devices for electro-sensitive protective equipment such as the Shadow 9, safety controller, etc.	

Error (see *Table 4-2* and *Table 4-3*, above)	**Description and Remedy**	**Reference**
Safety output error due to power supply voltage or noise (continued)	Effect of noise may be excessive. If other devices using the same power supply generate noise, do not share the same power supply with other devices, and use a separate power supply exclusively for the safety components. The inductive noise tends to be induced especially if the power supply line of the machine guarded and the power supply line of the Shadow 9 are arranged in parallel. Arrange the exclusive power supply near the Shadow 9 or lay the power supply line of the Shadow 9 away from the power supply line of the machine guarded. If the power supply for the Shadow 9 is located near the power supply of the machine guarded and it uses the same ground, it is subject to the influence of common mode noise from the ground. Separate the grounding point or use it as the exclusive ground	
Communication error due to power supply voltage or noise	The power supply voltage may have dropped temporarily when the Shadow 9 is in operation. Check for temporary power supply voltage drop (by about 12 Vdc) by the influence of the inductive load, etc. If the exclusive power supply is not used, check the power consumption of other connected devices for enough capacity. Communication error may have occurred due to noise. Check the noise level in the environment. Make sure low- and high-voltage wires are in separate conduit.	
Internal error due to power supply voltage or noise	The internal circuitry may be defective due to power supply voltage or noise. Check the noise level in the environment. Make sure that the power supply voltage is 24 VDC ±20%. If the indicator still shows this error, replace the Shadow 9.	

Error (see *Table 4-2* and *Table 4-3*, above)	Description and Remedy	Reference
Internal or communication error due to noise	The internal circuitry may be defective due to noise. Check the noise level in the environment. Communication error may have occurred due to noise. Check the noise level in the environment.	
Internal error (not listed above)	An error may have occurred in the internal circuit. Replace the Shadow 9.	

Other Troubleshooting Steps

ON/OFF LED Is Red and No Fault Indicated

If the ON/OFF LED illuminates red even when you turn the Program/Run/Start key switch to START, hold a few seconds, and release it, and the light curtains are unobstructed, disable both programmable fixed blanking and floating blanking, power Shadow 9 down and then up, and realign the unit (see *Checking Alignment*, page 114).

In a cascaded system, if the ON/OFF LED on the first receiver is red, check the alignment of all cascaded pairs of heads and realign if necessary.

ON/OFF LED Not Green

If the ON/OFF LED on the first receiver is not illuminated green and there is no object in the light field, dirt on the lens window may be blocking a light beam. Try cleaning the lens window on both transmitter and receiver, see *Checking and Cleaning Lens Windows*, page 114.

If, after cleaning the lens windows, the ON/OFF LED is still not illuminated green, the next step is to place the optic heads approximately 12 in. (305 mm) apart. Unbolt either the receiver or transmitter, take the unbolted unit off its mounting, and hold it directly in front of the other head at a distance of 12 in. (305 mm). You may need to disconnect wiring in order for the head to reach.

NOTICE
Power down the control before connecting or disconnecting the wires to the heads.

Make sure the lenses are pointed directly at one another and you have the Shadow 9 heads in the same plane.

If the ON/OFF LED illuminates green after you have brought the heads close together, there is a problem with your installation. Reread the mounting instructions starting on page 47 to be sure you understand how Shadow 9 heads should be mounted. When you adjust your brackets so they are in the same horizontal and vertical plane, the Shadow 9 transmitter and receiver should align.

If the ON/OFF LED is not illuminated green after adjusting the mounting brackets, your Shadow 9s probably have an internal problem. Call Wintriss Tech. Support for assistance.

ON/OFF LED Green but Press Won't Start

⚠ WARNING

GUARD AGAINST ELECTRIC SHOCK HAZARD

- Ensure that the power source is off before checking or replacing fuses.
- Turn off and disconnect power from the Shadow 9 safety light curtain and from the machinery it is connected to, including the machine control and motor, before making any wiring connections.
- Ensure that all procedures are performed by qualified personnel.

Failure to comply with these instructions could result in death or serious injury.

If the ON/OFF LED illuminates green, but you cannot start the press, check the stop relays on the relay board on the optional Shadow 9 control box main board (see *Figure 2-27*, page 70), following the instructions in *Checking and Replacing Control Relays in Optional Shadow 9 Control Box*, page 116.

Checking and Cleaning Lens Windows

CAUTION

PREVENT DAMAGE TO LENS WINDOWS FROM CLEANING

Use only a mild detergent and a soft cloth to clean lens windows.

DO NOT use solvents such as paint thinner, benzene, or acetone, or other chemicals. These can damage the product's resin components and paint.

Failure to comply with these instructions may result in property damage.

Sometimes dirt, oil, or another substance adheres to the plastic lens window on the optic heads, potentially blocking one or more light beams and causing a press shutdown. If the ON/OFF LED indicator illuminates red when there are no objects in the light field a dirty lens window may be the cause.

To clean the lens window, use a clean, particle-free cloth and a mild detergent. Make sure you avoid excessive rubbing.

Checking Alignment

Shadow 9 can go out of alignment if the mounting brackets have been bent, if a unit has been struck by another piece of equipment (die cart, forklift, etc.), or if mounting bolts have loosened, allowing the units to move slightly. You may have an alignment problem if the ON/OFF LED indicator illuminates red when the light field is clear.

To check alignment, first loosen the mounting brackets on one of the optic heads. Rotate the head back and forth, watching the ON/OFF LED indicator to see if it becomes illuminated green (see *Initial Installation: Aligning and Tightening Down Shadow 9 Heads*, page 87).

If the ON/OFF LED does not come on green, remove either the receiver or transmitter from its bracket, and move it to approximately 12 in. (305 mm) from the other head. Make sure that the connection to the control remains intact as you move the head closer to the other. Aim the head so it is pointing directly at the mating optic head, watching the ON/OFF LED indicator. Shadows always align at this close range if working properly. If the ON/OFF LED illuminates green, the optic heads may have been misaligned when anchored in their brackets. Check for the cause of misalignment and correct it.

To make sure that misalignment is the cause of a ON/OFF LED indicator going red, place both heads on a bench so that they are aligned and the ON/OFF LED illuminates green. Move one unit slowly away from the other, keeping the beams aligned. If the ON/OFF LED comes on red as you move the heads apart, the problem may be a weak transmitter LED or receiver phototransistor. Contact Wintriss Tech. Support immediately to discuss return of the unit.

When a phototransistor becomes weak, it can detect a light beam at close range but not at a distance. If an LED becomes weak, it cannot generate enough light to be detected by its corresponding phototransistor.

Checking and Replacing the AC Power Fuse in Optional Shadow 9 Control Box

⚠ WARNING

GUARD AGAINST ELECTRIC SHOCK HAZARD

- Ensure that the power source is off before checking or replacing fuses.
- Disconnect power from the machinery it is connected to before making any wiring connections. This includes disconnecting power to the machine control and motor.
- Ensure that all procedures are performed by qualified personnel.

Failure to comply with these instructions could result in death or serious injury.

Whenever Shadow 9 loses power, first check the AC power fuse, F1, on the optional Shadow 9 control main board (see *Figure 2-27*, page 70). F1 is a time-lag fuse rated at 1.25 A @ 250 Vac.

1. Power down Shadow 9.
2. Open the door of the control by turning the locking clasp.
3. Locate fuse F1 on the main board to the left of the AC power connections.
4. Remove the fuse and test with an ohmmeter. Put the ohmmeter leads on each side of the fuse. No resistance (0 ohms) means the fuse is good.
5. If the fuse is bad, insert a new fuse.
6. Close the door of the control and secure with the locking clasp.
7. Power up Shadow 9.

Checking and Replacing Control Relays in Optional Shadow 9 Control Box

⚠ DANGER

AVOID IMPROPER SAFETY RELAY REPAIR

Replace the relay board on the optional Shadow 9 control main board (see *Figure 2-27*, page 70) before placing the safety product back into operation after the occurrence of a failed relay.

If a relay fuses:

- DO NOT reset Shadow 9 to restart the machine.
- Remove Shadow 9 from operation immediately and replace the relay board before operating the press again.

Failure to comply with these instructions will result in death or serious injury.

⚠ WARNING

GUARD AGAINST ELECTRIC SHOCK HAZARD WHEN WORKING INSIDE ENCLOSURE WITH POWER ON

- DO NOT touch electrical connections or circuit boards.
- Use test equipment only on the terminals specified in the instructions.
- Ensure that this test is performed by qualified personnel.

Failure to comply with these instructions could result in death or serious injury.

⚠ WARNING

GUARD AGAINST ELECTRIC SHOCK HAZARD WHEN CHANGING RELAYS

- Turn off and disconnect power from the Shadow 9 safety light curtain and from the machinery it is connected to before checking relays or replacing the relay board, unless the test requires power to be on. This includes disconnecting power to the machine control and motor.
- Ensure that all tests and repairs are performed by qualified personnel.

Failure to comply with these instructions could result in death or serious injury.

If the stop relays in the optional Shadow 9 control are not working properly, you must first determine the cause of the problem.

If a relay malfunction prevents clearing of the Curtains Obstructed state (allowing the ON/OFF LED to turn from red to green), the problem is most likely that the contacts on one or both of the relays are welded shut, or a relay coil will not energize to close the contacts. In either case, replace the relay board as instructed on page 116.

If the relay contacts appear to be cycling (opening and closing) and the ON/OFF LED illuminates green, the problem is likely that a relay contact is pitted or burned, causing resistance at the contact to be so high that insufficient current can flow through the contacts. Perform a resistance test to determine if the relay board needs to be replaced, as described in the next section, *Performing a Resistance Test*.

Performing a Resistance Test

If there is a problem with the relays but the light curtain is in an "Unobstructed" state (the ON/OFF LED illuminates green), perform a resistance test on the OSSD 1 and OSSD 2 relay contacts, using a digital volt-ohm meter, as shown below. Replace the relay board if you find a bad relay, following the instructions in *Replacing the Relay Board*, page 118.

1. Remove power from the Shadow 9 control and connected machinery.
2. Open the door of the Shadow 9 control box.

⚠ WARNING

GUARD AGAINST ELECTRIC SHOCK HAZARD WHEN CHECKING RELAYS

- Turn off and disconnect power from the Shadow 9 safety light curtain and from the machinery it is connected to before checking relays, unless the test requires power to be on. This includes disconnecting power to the machine control and motor.
- Ensure that all tests are performed by qualified personnel.

Failure to comply with these instructions could result in death or serious injury.

3. Carefully remove the wires connected to terminal block TB4 on the relay board, and cap them to avoid an electric shock and prevent a short circuit on the Shadow 9 board. See *Figure 2-27*, page 70, for the location of the relay board on the Shadow 9 control main board.

NOTICE

Make a sketch of the existing wiring connections to consult when you rewire TB4 in step 8.

4. Power up the Shadow 9 control, and verify that the light curtains are in an Unobstructed state (ON/OFF LED is green).
5. With the volt-ohm meter set to "Ohms," measure the resistance across the OSSD 1 N/O contacts, pins 1 and 2 on TB4. These pins are labelled "N.O. 1" on the relay board. The resistance should be less than 5 ohms. If it isn't, replace the relay board (see next section).
6. Measure the resistance across the OSSD 2 N/O contacts, pins 3 and 4 on TB4 (labelled "N.O. 2"). If the resistance is not less than 5 ohms, replace the relay board (see next section).
7. Obstruct the light curtain (ON/OFF LED should be red), and measure the resistance across the OSSD 2 N/C contacts, pins 5 and 6 on TB4 (labelled "N.C."). The resistance should be less than 5 ohms. If it isn't, replace the relay board (see next section).
8. Reconnect the wiring you removed in step 3.
9. If the relay contacts test out correctly, check the wiring going to TB4 and its voltage, if applicable, referring to the wiring diagrams at the end of the manual to determine your exact wiring configuration.

Replacing the Relay Board

⚠ DANGER

AVOID IMPROPER SAFETY RELAY REPAIR

Replace the Shadow 9 relay board after the occurrence of a failed safety relay before placing the light curtain back into operation.

Failure to comply with these instructions will result in death or serious injury.

⚠ WARNING

GUARD AGAINST ELECTRIC SHOCK HAZARD WHEN WORKING INSIDE ENCLOSURE WITH POWER ON

- DO NOT touch electrical connections or circuit boards.
- Use test equipment only on the terminals specified in the instructions.
- Ensure that this test is performed by qualified personnel.

Failure to comply with these instructions could result in death or serious injury.

If one or both Shadow 9 safety relays fail, you should replace the entire relay board (see *Figure 2-27*, page 70). You can order a new board from Wintriss Tech. Support. To replace the relay board, do the following.

1. Turn off power to Shadow 9.
2. Open the door of the control by turning the locking clasp.
3. With one hand, push the two plastic clips holding the top of the board in place away from the edges of the board, then with the other hand grasp the top of the board firmly by its sides and pull it gently out of its socket. Remove the bottom of the board from its retaining clips by pushing the clips aside and pulling the board upward.
4. Plug the replacement board into the relay board socket, and snap the plastic clips into place to secure the board.
5. Close the door of the control and secure with the locking clasp.
6. Power on Shadow 9.

Checking for and Correcting Cross Talk

If the ON/OFF LED indicator on the first receivers of two Shadow 9 units mounted close to one another (e.g., on adjacent presses) illuminates alternately green and red when there is no visible obstruction in the light field, “cross talk” may be the cause. Cross talk occurs when the LEDs in the transmitter of one pair are detected by the phototransistors in the receiver of the other pair.

To diagnose the problem, first try swapping the transmitter with the receiver on one of the pairs. If the symptoms disappear, cross talk was the problem. You can also place an opaque barrier between the two pairs, making sure that the barrier runs all the way from the transmitter to the receiver. If the symptoms disappear, cross talk was the problem.

To remedy cross talk problems between two Shadow 9 units, refer to *Preventing Cross Talk between Two Pairs of Shadow 9 Heads*, page 65.

Appendix A – Wiring Shadow 9 Heads Directly to WPC

NOTICE

The “first transmitter” or “first receiver” is the one connected to the WPC or the optional Shadow 9 control box, whether in a cascade or a standalone pair of heads.

You can wire two first pairs of Shadow 9 transmitter and receiver heads directly to a WPC 2000 or WPC 1000 clutch/brake control designed especially for Shadow 9. This WPC unit has two Program/Run/Start switches installed on the front of the enclosure. Switches are pre-wired. However, you must connect the Start terminal on the first receiver to the Start contact on the Program/Run/Start key switch.

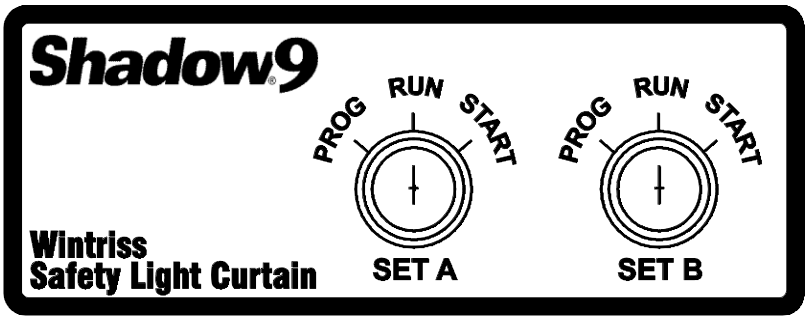

Figure A - 1. WPC Program/Run/Start Key Switches for Shadow 9 Light Curtains

NOTICE

EXTERNAL DEVICE MONITORING (EDM) MUST BE DISABLED IF SHADOW 9 CONNECTED DIRECTLY TO WPC

You must set Option switches SW1 and SW2 to OFF on the receiver to disable External Device Monitoring (EDM). See Table A - 3, page121, and *ENABLING External Device Monitoring (EDM) DIP Switches*, page 85.

Shadow 9’s External Device Monitoring (EDM) feature must be disabled, using receiver option switches DIP-SW1 and DIP-SW2 switch 2, when connecting optic heads directly to WPC. For instructions, see *ENABLING External Device Monitoring (EDM) DIP Switches*, page 85.

To connect Shadow 9 Primary heads to WPC, do the following:

⚠ WARNING

GUARD AGAINST ELECTRIC SHOCK HAZARD

- Ensure that the power source is off before you make any wiring connections.
- Turn off and disconnect power from the Shadow 9 safety light curtain and from the machinery it is connected to, including the machine control and motor, before making any wiring connections.
- Ensure that all procedures are performed by qualified personnel.

Failure to comply with these instructions could result in death or serious injury.

1. Power down Shadow 9, WPC, and all attached machinery.

2. Determine how you will bring wiring from the first heads to the WPC enclosure.
3. Run the wires through flexible liquid-tight conduit to the enclosure. Run WPC 2000 wiring to one of the knockouts in the lower right corner (center- or right-mounted unit) or lower left corner (left-mounted unit). Run WPC 1000 wiring to a knockout in the bottom center of the unit.

   Because WPC is rated NEMA 12 (protected against dust and oil), you must use conduit of the same rating and make proper connections to ensure NEMA 12 protection.
4. Measure and cut transmitter and receiver wires so they reach the appropriate connectors on the WPC 2000 Main Processor board or WPC 1000 control board.

   WPC 2000 wires must reach TB104 on a center- or right-mounted board; they must reach TB101 on a left-mounted board. WPC 1000 wires must reach both TB101 and TB102.
5. Remove enough of the plastic cable jacket so the conductors are exposed from the knockout to the farthest terminal block they are required to reach.

   First, make a shallow incision with an Exacto knife around the circumference of the cable, then bend the insulation back and forth at the incision point and pull the insulation free.
6. Remove 3/16 to 1/4 in. of insulation from the end of each conductor, using a wire stripper.
7. Connect wires as shown in *Table A - 1* (WPC 2000 Set A), Table A - 2 (WPC 2000 Set B), Table A - 4 (WPC 1000), and figures 9 (WPC 2000) and 11 (WPC 1000) at the end of the manual.

Table A - 1. Set A Shadow 9 First Transmitter/Receiver Wiring Connections to WPC

Set A	Wire Color	Signal	Set A WPC 2000 Pin #
Transmitter	Blue	0 Vdc	30 (TB103 Top)
	Brown	24 Vdc	42 (TB104 Top)
	White	–	N/C. Cut off unneeded wire.
	Black	–	N/C. Cut off unneeded wire.
	Yellow	–	N/C. Cut off unneeded wire.
Receiver	Blue	0 Vdc	30 (TB103 Top)
	Brown	24 Vdc	42 (TB104 Top)
	Red	AUX	N/C. Cut off unneeded wire.
	Black	OSSD 1	77 (TB103 Bottom)
	White	OSSD 2	87 (TB104 Bottom)
	Yellow	RST/EDM.	Connect to Start (Yellow) wire from Set A Program/Run/Start key switch
	Pink	–	N/C. Cut off unneeded wire.
	Gray	CTL2	Connect to Prog (Grey) wire from Set A Program/Run/Start key switch

N/C indicates no connection

Table A - 2. Set B Shadow 9 First Transmitter/Receiver Wiring Connections to WPC 2000

Set B	**Wire Color**	**Signal**	**Set B WPC 2000 Pin #**
Transmitter	Blue	0 Vdc	30 (TB103 Top)
	Brown	24 Vdc	42 (TB104 Top)
	White	–	N/C. Cut off unneeded wire.
	Black	–	N/C. Cut off unneeded wire.
	Yellow	–	N/C. Cut off unneeded wire.
Receiver	Blue	0 Vdc	30 (TB103 Top)
	Brown	24 Vdc	42 (TB104 Top)
	Red	AUX	N/C. Cut off unneeded wire.
	Black	OSSD 1	78 (TB103 Bottom)
	White	OSSD 2	88 (TB104 Bottom)
	Yellow	RST/EDM.	Connect to Start (Yellow) wire from Set B Program/Run/Start key switch
	Pink	–	N/C. Cut off unneeded wire.
	Gray	CTL2	Connect to Prog (Grey) wire from Set B Program/Run/Start key switch

N/C indicates no connection

Table A - 3. Disabling External Device Monitor (EDM): DIP Switch Settings: Receiver DIP-SW1 and DIP-SW2 Switch

	Receiver DIP-SW1 Switch 2	**Receiver DIP-SW2 Switch 2**
EDM Disabled	**OFF**	**OFF**
	2 ON	**2 ON**

Table A - 4. Shadow 9 First Transmitter/Receiver Wiring Connections to WPC 1000

	Wire Color	Signal	WPC 1000 Pin #
Transmitter	Blue	0 Vdc	28 (TB101 Bottom)
	Brown	24 Vdc	47 (TB102 Bottom)
	White	–	N/C. Cut off unneeded wire.
	Black	–	N/C. Cut off unneeded wire.
	Yellow	–	N/C. Cut off unneeded wire.
Receiver	Blue	0 Vdc	28 (TB101 Bottom)
	Brown	24 Vdc	47 (TB102 Bottom)
	Red	AUX	N/C. Cut off unneeded wire.
	Black	OSSD 1	8 (TB101 Top)
	White	OSSD 2	21 (TB102 Top)
	Yellow	RST/EDM.	Connect to Start (Yellow) wire from Program/Run/Start key switch
	Pink	–	N/C. Cut off unneeded wire.
	Gray	CTL2	Connect to Prog (Grey) wire from Program/Run/Start key switch

Connect the yellow receiver wire to the yellow wire from the Program/Run/Start key switch, using the crimp-type wire nut provided. Simply twist together the exposed ends of both yellow wires, insert the wires in the wire nut, and secure the wires in the nut with a crimping tool.

The white, black, and yellow transmitter wires, and pink and red receiver wires are not used. Cut these conductors off near the enclosure entry and bind them to the other wires with a ty-wrap.

Appendix B – Checkout Procedure Log

The following checkout procedure must be performed by qualified personnel during initial Shadow 9 system installation and at least every three months after that. Perform the procedure more frequently if machine usage and company guidelines require.

Machine Identification: _____ Date: _____

Item	Condition	Comments
1. Verify that the guarded machine is a type that may be used with Shadow 9. See the Requirements page at the beginning of manual for further information.	Pass Fail	
2. Verify that the mounting distance of Shadow 9 is equal to or greater than the minimum safe distance from the pinch point. See *Calculating the Safety Distance*, page 36.	Pass Fail	
3. Determine that all access to the pinch point not protected by Shadow 9 is guarded by other means, such as gates, fencing or other approved methods. Verify that all additional guarding devices are installed and operating properly.	Pass Fail	
4. Make sure that the operator is not able to stand between the Shadow 9 sensing field and the machine pinch point. Verify that the light curtain can be reset only from a position outside and within view of the hazardous machine area.	Pass Fail	
5. Inspect the electrical connections between the guarded machine's control system and Shadow 9. Verify that they are properly connected to the machine such that a stop signal from Shadow 9 results in an immediate halt of the machine's cycle. See *Connecting Stop Circuits to the Control*, page 76.	Pass Fail	
6. If the External EDM monitoring feature in the optional Shadow 9 Control is not used, proceed to step 7. To test the External EDM feature, verify that the feature has been enabled. Turn the machine power on. Cycle the machine. Make sure that the switch labelled "SW1 EDM" on the main board in the optional Shadow 9 control is set to the "EXT" position. Place a temporary jumper wire between the terminal labelled "RST/EDM" on TB2 on the Shadow 9 control main board and the terminal labelled "0 VDC" on TB3. Remove the temporary jumper. Turn the Program/Run/Start key switch to START, hold for a few seconds, and release. If you are using programmable fixed blanking, refer to *Programming a Fixed Blanking Window*, page 101, and make sure the blanking feature is properly configured and any required supplemental guarding is in place.	Pass Fail	
7. Record the results of this checkout procedure in the machine log; then perform the Test Procedure, see Appendix C, page 127.	Pass Fail	

Technician Signature: _____

Appendix C – Test Procedure Log

The following test procedure must be performed by qualified personnel during initial Shadow 9 installation, and according to the employer's regular inspection program, and after any maintenance, adjustment or modification to the Shadow 9 or the guarded machine. Testing ensures that the light curtain, safety system, and machine control system work together to properly stop the machine. Failure to test properly could result in serious injury to personnel. To test the Shadow 9, use a test object of the correct size.

Machine Identification: _____ Date: _____

Item	Condition	Comments
1. Disable the guarded machine. Apply power to the Shadow 9.	Pass Fail	
2. Visually inspect the machine to ensure that access to the pinch point is only through the Shadow 9 sensing field. If not, additional guarding, including mechanical barriers, may be required. Verify that all additional guarding devices and barriers are installed and operating properly.	Pass Fail	
3. Verify that the mounting distance of the Shadow 9 is equal to or greater than the calculated minimum safety distance from the pinch point. See *Calculating the Safety Distance*, page 36 . Ensure that the operator is not able to stand between the Shadow 9 sensing field and the pinch point.	Pass Fail	
4. Check for signs of external damage to the Shadow 9, the machine, and the electrical cables and wiring. If damage is found, lock the machine off and report to the supervisor.	Pass Fail	
5. Interrupt the Shadow 9 sensing field with the proper size test object. Move the test object inside the perimeter (along the top, sides and bottom) of the sensing field and up and down through the center. If in Automatic Start mode, verify that the ON/OFF LED illuminates red. If in Start/Restart Interlock mode, verify that the ON/OFF LED illuminates red and the yellow INT-LK (interlock) LED illuminates. Turn the Program/Run/Start key switch to START, hold it a few seconds, and release before proceeding to step 6. If you are using programmable fixed blanking, refer to *Programming a Fixed Blanking Window*, page 101, and make sure the blanking feature is properly configured and any required supplemental guarding is in	Pass Fail	
6. Start the machine. While the machine is in motion, interrupt the sensing field with the test object. The machine should stop immediately. Never insert the test object into the dangerous parts of the machine. With the machine at rest, interrupt the sensing field with the test object. Verify that the machine will not start with the test object in the sensing field.	Pass Fail	
7. Verify that the braking system is working properly. If the machine does not stop fast enough, adjust the braking system or increase the distance from the sensing field to the pinch point.	Pass Fail	
8. If the safety devices or the machine fails any of these tests, do not run the machine. Immediately tag or lock out the machine to prevent its use and notify the supervisor.	Pass Fail	

Technician Signature: _____

Appendix D – Extracts from OSHA Regulations and ANSI Standards

> **⚠ WARNING**
>
> **REFER TO CURRENT REVISIONS OF OSHA/ANSI DOCUMENTS**
>
> The following extracts from OSHA and ANSI documents are provided for the user's convenience only. Refer to the most recent revisions of the original OSHA safety regulations and ANSI standards to ensure that you have the most up-to-date information.
>
> **Failure to comply with these instructions could result in death or serious injury.**

This appendix provides extracts from the Occupational Safety and Health Administration (OSHA) regulations and the American National Standards Institute (ANSI) standards covering presence-sensing devices.

Extracts from OSHA Regulation 1910.217

> **⚠ WARNING**
>
> **REFER TO CURRENT REVISIONS OF OSHA/ANSI DOCUMENTS**
>
> The following extracts from OSHA and ANSI documents are provided for the user's convenience only. Refer to the most recent revisions of the original OSHA safety regulations and ANSI standards to ensure that you have the most up-to-date information.
>
> **Failure to comply with these instructions could result in death or serious injury.**

Reprinted below are extracts from OSHA regulation 1910.217 pertaining to the use of presence-sensing devices for point-of-operation guarding on mechanical power presses. Also reprinted here are interpretations of selected regulations provided by the Precision Metalforming Association (PMA). Extracts from the OSHA regulation are printed in the left- hand column; interpretations by PMA are shown in the right-hand column.

Wintriss makes no claim for the accuracy or effectiveness of the PMA interpretations, and persons making use of this material do so at their own risk. PMA interpretations should not be relied upon for use in any specific application. The material is provided, with PMA's permission, for informational purposes only.

Refer to the most recent versions of OSHA documents. To obtain copies of OSHA regulations, write to: OSHA's Office of Information and Consumer Affairs, 200 Constitution Avenue NW, Room N3647, Washington, DC 20210. tel (202) 219-8151; toll free 800-321-6742; fax (202) 219-5986.

Extracts from OSHA Regulation 1910.217

OSHA 1910.217 (c).

(c) SAFEGUARDING THE POINT OF OPERATION. –

(1) General requirements.

(i) It shall be the responsibility of the employer to provide and insure the usage of "point of operation guards" or properly applied and adjusted point of operation devices on every operation performed on a mechanical power press. See Table 0-10.

OSHA 1910.217 (c) (3) (i) (a)

(3) Point of operation devices.

(i) Point of operation devices shall protect the operator by:

(a) Preventing and/or stopping normal stroking of the press if the operator's hands are inadvertently placed in the point of operation.

OSHA 1910.217 (c) (3) (iii)

(iii) A presence-sensing point of operation device shall protect the operator as provided in paragraph (c) (3) (i) (a) of this section, and shall be interlocked into the control circuit to prevent or stop slide motion if the operator's hand or other part of his body is within the sensing field of the device during the downstroke of the press slide.

(a) The device may not be used on machines using full revolution clutches.

(b) The device may not be used as a tripping means to initiate slide motion

(c) The device shall be constructed so that a failure within the system does not prevent the normal stopping action from being applied to the press when required, but does prevent the initiation of a successive stroke until the failure is corrected. The failure shall be indicated by the system.

(d) Muting (bypassing of the protective function) of such device, during the upstroke of the press slide, is permitted for the purpose of parts ejection, circuit checking and feeding.

(e) The safety distance (Ds) from the sensing field to the point of operation shall be greater than the distance determined by the following formula:

Ds = 63 inches/second x Ts, where

Ds = minimum safety distance (inches);

63 inches/second = hand speed constant;

and

Ts = stopping time of the press measured at approximately 90° position of crankshaft rotation (seconds).

(f) Guards shall be used to protect all areas of entry to the point of operation not protected by the presence-sensing device.

OSHA 1910.217 (c) (3) (5)

(5) Additional requirements for safe-guarding.

Where the operator feeds or removes parts by placing one or both hands in the point of operation, and a two hand control, presence-sensing device, Type B gate or movable barrier (on a part revolving clutch) is used for safeguarding:

(i) The employer shall use a control system and brake monitor which comply with paragraphs (b) (13) and (14) of this section. This requirement should be complied with by November 1, 1975.

OSHA 1910.217 (c) (3) (vii) (c)

(c) The safety distance (Ds) between each two hand control device and the point of operation shall be greater than the distance determined by the following formula:

Ds = 63 inches/second x Ts, where

Ds = minimum safety distance (inches);

63 inches/second = hand speed constant;

and

Ts = stopping time of the press measured at approximately 90° position of crankshaft rotation (seconds).

OSHA 1910.217 (e) (1)

(e) INSPECTION, MAINTENANCE, AND MODIFICATION OF PRESSES

(i) It shall be the responsibility of the employer to establish and follow a program of periodic and regular inspections of his power presses to insure that all their parts, auxiliary equipment, and safeguards are in safe operating condition and adjustment. The employer shall maintain records of these inspections and the maintenance work performed.

(ii) Each press shall be inspected and tested no less than weekly to determine the condition of the clutch/brake mechanism, anti-repeat feature and single stroke mechanism. Necessary maintenance or repair or both shall be performed and completed before the press is operated. The employer shall maintain records of these inspections and the maintenance work performed. These requirements do not apply to those presses which comply with paragraphs (b) (13) and (14) of this section.

Extracts from ANSI Standards for Presence-sensing Devices

⚠ WARNING

REFER TO CURRENT REVISIONS OF OSHA/ANSI DOCUMENTS

The following extracts from OSHA and ANSI documents are provided for the user's convenience only. Refer to the most recent revisions of the original OSHA safety regulations and ANSI standards to ensure that you have the most up-to-date information.

Failure to comply with these instructions could result in death or serious injury.

Reprinted below are the American National Standards Institute (ANSI) standards for presence-sensing devices (light curtains). ANSI, a national federation of trade associations, technical societies, professional groups, and consumer organizations, is the United States clearinghouse and coordinating body for voluntary standards activity. Approximately 1000 companies are affiliated with the Institute as company members.

ANSI creates voluntary standards to eliminate duplication and to weld conflicting standards into single, nationally accepted standards under the designation "American National Standards." The standards reflect a national consensus of manufacturers, consumers, scientific, technical, and professional organizations, and governmental agencies.

Shown below are extracts of standards requirements and explanatory information from ANSI B11.1-2009 and B11.19-2010 for presence-sensing devices (light curtains). Complete versions of these documents can be obtained by writing to: ANSI, 1430 Broadway, New York, NY 10018.

Extracts from ANSI B11.1-2009 8.6.2.1

Standards Requirements

8.6.2.1.7 Each operator's hand controls shall be located at a distance from the point-of-operation so that the operator(s) cannot release either hand actuating control and reach into the point-of-operation during the hazardous portion of the cycle.

Explanatory Information

E8.6.2.1.7 The total stopping time of the press should include the total response time of the control system and the time it takes hazardous motion to stop. The following formula should be used when calculating the safety distance (Ds):

Ds = K (Ts + Tc + Tbm)

Where:

K = 63 inches/second (hand speed constant).

Ts = the stop time of the press measured from the final de-energized control element, usually the air valve.

Tc = the response time of the control.

Tbm = the additional time allowed by the stopping-performance monitor (brake monitor) before it detects stop time deterioration.

Extracts from ANSI B11.1-2009 8.6.2.1

Standards Requirements	Explanatory Information
	NOTE – Ts + Tc are usually measured by a stop time measuring device. When the press stopping-performance monitor setting is changed, the safety distance should be recalculated. See also Annex C.
8.6.3 Presence-sensing safeguarding device	
8.6.3.1 A presence-sensing device, when used for safeguarding, shall protect the operator as specified in E8.6.1 (a).	**E8.6.3.1** Various presence-sensing devices employ different sensing and adjustment techniques. The point at which a device responds to an intrusion can vary. Safety mats and area scanners may not be suitable (effective) safeguards when utilized as primary point-of-operation safeguarding. Factors which can affect this suitability include but are not limited to: a) response time; b) minimum object sensitivity; c) measurement accuracy; d) breach ability; e) penetration before detection; f) single point of failure; g) large safety distances. These devices may be utilized as supplemental safeguarding.
8.6.3.2 The device shall be interfaced with the control circuit to prevent or stop slide motion if any object is within the sensing field of the device during the hazardous portion of the cycle.	**E8.6.3.2** The device should be located or adjusted so that the device always responds to the intrusion at or prior to the safety distance Ds. Also, care should be taken when installing the device so that it does not detect false signals from other devices or equipment in the area. The presence-sensing device cannot protect against a catastrophic failure of the press, which causes unintended cycling action. See Annex A, Figure A.3.
8.6.3.3 The device shall not be used for safeguarding the point-of-operation on presses using full-revolution clutches.	

Extracts from ANSI B11.1-2009 8.6.2.1

Standards Requirements	Explanatory Information
8.6.3.4 When the sensing field has been interrupted, use of the normal press cycle-actuating means shall be required after clearing the sensing field to resume press operation. 8.6.3.5 When the device is used in the PSDI mode, re-initiation of the press motion shall be in accordance with 6.4.3.8.1.	
8.6.3.6 Muting of the device shall be permitted only during the non-hazardous portion of the press cycle	**E8.6.3.6** Muting is typically accomplished by interface circuits or auxiliary controls. The die closing portion of the cycle is always considered hazardous. In some cases, feeding and transfer automation or die features can cause additional hazardous conditions even during the opening portion of the cycle (upstroke). See also ANSI B11.19 for additional information.
8.6.3.7 Muting of the device shall be accomplished in a manner that conforms to the requirements of 6.11 and 8.8.	**E8.6.3.7** Muting is typically accomplished by interface circuits or auxiliary controls. The muting element should incorporate a similar level of control reliability as the presence-sensing device itself. A simple cam-operated limit switch wired in parallel with the device's output is inadequate, as its failure can remain undetected.
8.6.3.8 The device shall have an identifiable minimum object sensitivity so that an obstruction of an equal or greater size will be detected anywhere within the sensing field regardless of the plane of intrusion.	**E8.6.3.8** The device should have a minimum object sensitivity stated by the device supplier. For example, an electro-optical device may detect a 32 mm (1¼ inch) diameter opaque object anywhere in its sensing field but allow 25 mm (1 inch) obstructions to pass undetected at certain points in the field.
8.6.3.9 The device shall have a maximum response time, which shall not be affected by object sensitivity adjustments or environmental changes.	**E8.6.3.9** The device supplier should state the maximum total response time, including output devices, of the presence-sensing device.
8.6.3.10 Devices which require adjustments to accommodate variations in operating conditions, or which incorporate fixed blanking or floating blanking features, shall be designed so that the adjustments or features are capable of supervisory control by the user.	**E8.6.3.10** Typically, these adjustments or controls are key-operated or located under lockable covers.

Extracts from ANSI B11.1-2009 8.6.2.1

Standards Requirements	Explanatory Information
8.6.3.11 The device shall be provided with a means that visibly indicates when it is functioning properly.	**E8.6.3.11** Red and green indicators or other means that can be easily seen by the operator and others should be provided to indicate that the device is functioning.
Indication that the sensing field is being blanked shall be provided. For fixed blanking, the blanked area shall be identified. Supplemental safeguarding shall be provided to prevent access to the hazard through the fixed blanked area.	The blanking function of a presence-sensing safeguarding device desensitizes a portion of the sensing field by disabling one or more channels such that a specific interruption is ignored. Presence-sensing devices can be provided with either fixed or floating blanking. For fixed blanking, the desensitized area does not move or change once configured. Floating blanking allows the blanked area to move within the sensing field. Means to identify the desensitized area may include but are not limited to: a) Indicators within the device; b) Signage or marking of the fixed blanked area; c) The physical location of the object in the blanked area if movement or removal of the object can be detected and it results in a stop command. Means of supplemental safeguarding can include completely filling the fixed blanked area to restrict access to the hazard, installing the device at a distance that accounts for the worse case object sensitivity (see 8.6.3.16), or alternate safeguarding may be provided to prevent access to the hazard.
If means are provided to bypass the device, visible indication that the device is bypassed shall be provided	Means to provide visible indication may include but are not limited to: a) colored indicator lights; b) signage; c) physical position; d) awareness barrier (i.e., safety tape); e) other means.

Extracts from ANSI B11.1-2009 8.6.2.1

Standards Requirements	Explanatory Information
8.6.3.12 The device shall not fail to respond to the presence of the individual's hand or other body part due to the presence of a reflective object or workpiece.	
8.6.3.13 The device shall conform to the requirements of 6.11 and 8.8. In the event of a power failure to the device, the device shall initiate a stop command to the press control system.	
8.6.3.14 The interface of the presence-sensing device to the press control shall conform to the requirements of 6.11 and 8.8.	
8.6.3.15 The sensitivity of the device to intrusion shall not be adversely affected by changing conditions around the press.	
8.6.3.16 The effective sensing field of the device shall be located at distance from the nearest point-of-operation hazard so that individuals cannot reach into the point-of-operation with a hand or other body part before cessation of motion during the hazardous portion of the cycle.	**E8.6.3.16** The total stopping time of the press should include the total response time of the presence-sensing device, as stated by the supplier, the response time of the interface, the response time of the control system, and the time it takes the press to cease slide motion. The following formula should be used when calculating the safety distance: Ds = K (Ts + Tc + Tr + Tbm) + Dpf where K = 63 inches/second (hand speed constant) Ts = the stop time of the press measured from the final de-energized control element, usually the air valve Tc = the response time of the press control Tr = the response time of the presence-sensing device and its interface, if any, as stated by the supplier or measured by the user. Tbm = the additional stopping time allowed by the stopping-performance monitor before it detects stop time deterioration. Dpf = the added distance due to the penetration factor as recommended in ANSI B11.19, Annex D, Figure D.2. The minimum object sensitivity is stated by the supplier. If beam blankouts or

Extracts from ANSI B11.1-2009 8.6.2.1

Standards Requirements	Explanatory Information
	floating window features are used, these figures should be added to the object sensitivity figure before using the chart. NOTE - Ts + Tc is usually measured by a stop time measuring device. See also ANSI B11.19, Annex C and D. Whenever the press-cycle STOP command or stopping-performance monitor time or angle setting is changed, the safety distance should be recalculated. See also “stopping performance monitor” (6.12). NOTE – No increase in safety distance is required for fixed blanking applications if the blanked area is entirely occupied by the material or fixtures. In some instances, the use of blanking does not allow efficient production of certain piece parts. Horizontal placement of the sensing field, so that it detects that operator’s waist area, may present a solution. In this application, the operator may freely manipulate the workpiece and operate the press as long as the operator stands outside of the horizontal sensing field. The sensing field should be located so that the operator cannot reach the point-of-operation prior to interrupting the sensing field and completion of the stopping action. Where possible, the sensing field should be of sufficient depth to prevent the operator from standing between the field and the point-of-operation. See also ANSI B11.19, Annex C and D.
8.6.3.17 If the position of the device will allow the operator or others to place themselves between the sensing field and the point-of-operation, additional means shall be provided in conjunction with the device to prevent the operator or others from exposure to the point-of-operation hazard.	**E8.6.3.17** Additional means may include manual reset outside of the sensing field of the device or additional barrier guards, safety mats, light curtains, or other devices. Operator controls for each operator located outside of the sensing field of the presence-sensing device may be used. As an alternative to the reset control and to prevent an individual from stepping behind the sensing field of a PSD, the maximum distance

Extracts from ANSI B11.1-2009 8.6.2.1

Standards Requirements	Explanatory Information
	between the light curtain and the machine structure should not exceed 75 mm (3 inches). Supplemental safeguarding may be utilized to eliminate a space greater than 75 mm.
8.6.3.18 The device shall not be affected by ambient light or by light-source decay so that the increase in response time or object sensitivity is greater than the value used to calculate the safety distance.	**E8.6.3.18** Examples of ambient light are associated with windows, light fixtures, skylights, bay doors, or die lights.
8.6.3.19 All areas of entry to the point-of-operation not protected by the presence-sensing device shall be otherwise safeguarded	**E8.6.3.19** Usually the electro-optical presence-sensing devise is used in a manner that provides a protected zone in front of the primary work area with auxiliary devices or guards used to protect secondary access areas. In some cases, mirrors may be used in conjunction with the device to provide two-, three- or four-sided protection.
8.6.3.20 Press production systems with a configuration that would allow an individual to enter, pass through, and become clear of the presence-sensing device sensing field shall not be operated in the PSDI mode of operation.	**E8.6.3.20** For PSDI applications see Clause 10.
8.6.3.21 When a device is used on a press production system and the protection of the operator is dependent upon the stopping action of the press, a stopping-performance monitor shall be required in conformance with 6.12. See section 8.3.9 for exceptions.	

Extracts from ANSI B11.19-2010 8.3

Standards Requirements	Explanatory Information
8.3 Electro-optical, RF, and area scanning presence-sensing safeguarding devices	
8.3.1 Design and construction	
8.3.1.1 The presence-sensing device shall be designed and constructed to create a field that detects the presence of an individual(s). The presence-sensing device shall not create a hazard in and of itself.	**E8.3.1.1** The presence-sensing device should be designed and constructed such that it does not present hazards to individuals from: • sharp edge or pinch point hazards; • radiated light or energy hazards; • electromagnetic interference hazards; • electrical shock hazards.
8.3.1.2 The presence-sensing device shall have a minimum object sensitivity such that an obstruction of a same or greater size will always be detected anywhere within its sensing field, regardless of the plane of intrusion.	**E8.3.1.2** The presence-sensing device should have a minimum object sensitivity stated by the supplier. For example, an electro-optical device may detect an opaque object with a diameter of 32 mm (1.25") anywhere in its sensing field, but allow an obstruction with a diameter of 25 mm (1") to pass undetected at certain points in the field.
The RF (radio frequency) presence-sensing device shall provide means to adjust the sensitivity of the field. The field, once adjusted, shall not decrease in sensitivity below this established level.	
8.3.1.3 The presence-sensing device shall not fail to change its output state, if not bypassed or muted, when it detects the presence of an individual.	
8.3.1.4 Adjustment or configuration of presence-sensing devices shall be capable of being supervised.	**E8.3.1.4** Methods of meeting this requirement include, but are not limited to, the use of key operated controls, controls located under lockable covers, or controls that require a tool or password to access. Adjustment or configuration should only be performed by authorized individuals. Adjustments or configuration can include, but are not limited to: • muting; • blanking; • power adjustments; • sensing field configuration; • reset functions.
8.3.1.5 The presence-sensing device shall incorporate visual means to indicate that the	**E8.3.1.5** Indicators, (usually red and green), displays or meters should be provided to

Extracts from ANSI B11.19-2010 8.3

Standards Requirements	Explanatory Information
device is detecting an individual within the effective sensing field of the device.	indicate the status of the presence-sensing device. The visual means may be integral to the presence-sensing device or part of the interface or machine control system. Due to the prevalence of color blindness (10% in males for red/green), methods such as unambiguous positioning, patterning, labeling or flashing of the indicators may be effective in providing the indication required.
8.3.1.6 The presence-sensing device shall have a maximum response time that shall not be affected by object sensitivity or environmental changes. The safeguarding supplier shall provide the maximum response time of the presence-sensing device.	
8.3.1.7 The electro-optical and area scanner presence-sensing devices shall not be affected by ambient light conditions or by changes in the device light source characteristics, such that an increase in response time or object sensitivity occurs.	**E8.3.1.7** When the electro-optical and area scanner presence-sensing devices are exposed to signals from other electro-optical presence-sensing devices or to changes in ambient light commonly associated with windows, light fixtures, skylights, bay doors or work area lights, the response time or object sensitivity should not be adversely affected.
8.3.1.8 Components, subassemblies or modules of electro-optical, RF, and area scanning presence-sensing devices shall conform to the requirements of 6.1, or shall be designed and constructed to meet the safety performance level (risk reduction) as determined by a risk assessment.	**E8.3.1.8** See also, clause 5 and ANSI B11.0 (B11.TR3).
8.3.1.9 The area scanning presence-sensing device shall provide a means or operating mode to verify the size, shape, and detection capabilities of the detection area or zone. Information shall be provided by the area scanning device supplier to identify the: • maximum safeguarding range; • minimum object sensitivity within the stated safeguarding range; • maximum field of view in degrees; • tolerance in the range measurement; and	**E8.3.1.9** These presence-sensing devices typically operate on the principle of ―diffuse reflectance," which is a principle of transmitting beam(s) of light to form a detection area or zone. When an object enters the detection area, it reflects the transmitted light back to the device, which then evaluates the object's position. The amount of reflected light (degree of reflectance in percent) that can be reliably detected typically ranges from 1.8% to over 90% and can be represented graphically by

Extracts from ANSI B11.19-2010 8.3

Standards Requirements	Explanatory Information
• detection capabilities with respect to the reflectivity of an object versus the distance to the object.	reflectivity versus distance. For more information see IEC 61496 parts 1 and 3.
8.3.2 Installation, operation and maintenance	
8.3.2.1 Exposure to the hazard(s) shall not be possible by reaching over, under or around the sensing field of the presence-sensing device. Additional guards or safeguarding devices shall be provided to protect those areas.	**E8.3.2.1** The user should select a presence-sensing device adequate to prevent individuals from reaching over, under or around the sensing field during the hazardous portion of the machine cycle. Additional safeguarding may be required in conjunction with the device to meet this requirement.
The effective sensing field shall be of adequate height, width, and depth so that entry of the individual into the hazard zone is detected.	If individuals can place themselves between the sensing field and the hazard zone, additional safeguarding should be used in conjunction with the device to prevent the individual from exposure to the hazard. It has been found by practical application that this situation can occur with as little as 75 mm (3⅊) depending on the positioning (e.g., height) and the minimum object sensitivity of the sensing field, and the ability of the individual to lean against the machine frame or guarding. It should not be possible to climb on or walk on the machine support structure to avoid detection by the presence-sensing device when the sensing field is orientated horizontally. When an individual can pass through the sensing field, it is considered perimeter guarding (see also, the requirements of 6.5 and 8.3.2.4). The electro-optical and area scanning presence-sensing devices may fail to detect an individual's presence due to reflective workpieces or objects in the vicinity of the device. Care should be used to ensure that these reflections do not render the device ineffective. Some examples of reflective objects include, but are not limited to: • machine surfaces; • tooling;

Extracts from ANSI B11.19-2010 8.3

Standards Requirements	Explanatory Information
	• work pieces; • hand tools; • auxiliary equipment; • workholding tables and fixtures. Testing each set-up for minimum object sensitivity should be done with an appropriate test rod, following the supplier's recommendation. Where objects are placed within the defined sensing field of an area scanner presence-sensing device, care should be taken to ensure that: • no shadows exist behind the objects such that the device is rendered ineffective; • removal of the object will not allow undetected access to a hazard zone.
8.3.2.2 The presence-sensing device shall be installed such that it does not create additional hazards.	E8.3.2.2 Some installation hazards include, but are not limited to: • pinch point hazards created by interference between the presence-sensing device and moving members of the machine; • tripping hazards; • electrical shock hazards; • overhead or other ―strike against" hazards; • thermal hazards. Where such conditions can exist, additional safeguarding may be required.
8.3.2.3 The presence-sensing device shall be installed at a location so that the effective sensing field prevents individuals from reaching the hazard(s) during the hazardous portion of the machine cycle.	**E8.3.2.3** The safety distance calculation is dependent upon the: • speed of approach of the individual; • total response time of the safeguarding device as stated by the supplier; • response time of the interface; • response time of the control system; • time it takes the machine to stop hazardous motion; and • depth penetration factor of the safeguarding device. See Annex D for further explanation and an example method to calculate the safety distance.

Extracts from ANSI B11.19-2010 8.3

Standards Requirements	Explanatory Information
	Additional methods might be used as determined by the supporting risk assessment documentation.
	For installations in which the direction of approach is perpendicular to the sensing field (i.e., normal approach), the minimum distance between the sensing field and the closest hazard should be no less than 100mm (4‖) regardless of the outcome of a safety distance calculation. Practical application has shown that less than 100 mm (4‖) of safety distance can result in increased risk of harm. See also, ISO 13855.
	RF presence-sensing devices have sensing fields that can vary due to: • antenna(e) design; • effects of adjacent machinery and equipment; • field sensitivity adjustments; and • environmental factors (such as humidity or temperature).
	Before the machine is used for production purposes, the RF presence-sensing device should be checked to ensure that the effective field protects individuals at the safety distance.
8.3.2.4 The presence-sensing device shall protect individuals from hazards by initiating an immediate stop command to the machine control system when the sensing field of the device is interrupted during the hazardous portion of the machine cycle. It shall require re-initiation of the normal actuating means prior to the start or continuation of motion of the machine.	**E8.3.2.4**
When an individual can pass through the sensing field of the presence-sensing device, the device shall initiate an immediate stop command to the machine control system and shall require that the device or machine control be manually reset before hazardous situation can occur.	The operator should ensure that no individual is in the safeguarded area before re-setting the presence-sensing device or machine control and initiating a hazardous situation.

Extracts from ANSI B11.19-2010 8.3

Standards Requirements	Explanatory Information
The reset function and devices shall comply with 6.5.	
8.3.2.5 Indication that the sensing field is being blanked shall be provided. For fixed blanking, the blanked area shall be identified. Supplemental safeguarding shall be provided to prevent access to the hazard through the fixed blanked area.	**E8.3.2.5** The blanking function of an electro-optical presence-sensing device desensitizes a portion of the sensing field by disabling one or more channels such that a specific interruption is ignored. Electro-optical presence- sensing devices can be provided with fixed or floating blanking. Floating blanking allows the blanked area to move within the sensing field. When floating blanking is enabled and the object sensitivity increases, the sensing field must be placed at a greater distance from the hazard, see 8.3.2.2 and Annex D and Figure D.1. For fixed blanking, the desensitized area does not move or change once configured. Means to identify the desensitized area may include but are not limited to: • indicators within the electro-optical presence-sensing device; • signage or marking of the fixed blanked area; • the physical location of the object in the blanked area if movement or removal of the object can be detected and results in a stop command. Means of supplemental safeguarding can include: • completely filling the fixed blanked area to restrict access to the hazard; • the electro-optical presence-sensing device installed at a distance that accounts for the worst case object sensitivity; (see 8.3.2.2) or • alternate safeguarding may be provided to prevent access to the hazard.
8.3.2.6 Components, subassemblies or modules of the interface or machine control system shall conform to the requirements of 6.1, or shall be designed and constructed to meet the safety	**E8.3.2.6** See also, clause 5 and ANSI B11.0 (B11.TR3).

Extracts from ANSI B11.19-2010 8.3

Standards Requirements	Explanatory Information
performance level (risk reduction) as determined by a risk assessment.	
8.3.2.7 Bypassing of the presence-sensing device shall comply with 6.6.	
8.3.2.8 Muting of the presence-sensing device shall comply with 6.7.	
8.3.2.9 The RF presence-sensing device shall not be adversely affected by changes around the machine that may alter the sensitivity of the device such that individuals are no longer detected in the sensing field at the proper safety distance.	**E8.3.2.9** The RF presence-sensing device may be affected by changes in the conditions around the machine such as ambient conditions, the placement of parts and tote boxes, grounding conditions of the operator, or the movement of industrial trucks. These changes should not adversely affect the performance of the device.
8.3.2.10 The total tolerance in the range measurement of an area scanning presence-sensing device shall be included in determining the distance from the nearest recognized hazard to the detection area or zone. This detection area shall be identified and tested to ensure that the device is able to detect individuals entering the detection area. The effective sensing field shall be verified for proper size and coverage upon installation, replacement, or changes of the detection area.	**E8.3.2.10** When the area scanning presence-sensing device is horizontally mounted, the detection area or zone should be visibly marked on the floor. This verification can be accomplished by using a programming device or by physically identifying the perimeter of the detection area with an appropriate test rod, following the supplier's recommendation. This verification is to ensure that a pre-programmed area scanning presence-sensing device with a small or improper detection area is not used by mistake in an installation requiring a larger field. Area scanning presence-sensing device may not be suitable (effective) safeguards when used to protect an individual's hands or fingers from hazards. Items which can affect this suitability are: • response time; • minimum object sensitivity; • measurement accuracy.

Extracts from ANSI B11.19-2010 Annex D

Annex D – Safety Distance

(Informative)

The safeguarding devices listed below do not prevent an individual from reaching into a hazard zone. In order for these devices to be effective, they must either prevent the start of, or stop hazardous motion (or situation) when an individual is exposed to the hazard. For the devices to accomplish this requirement, they must be located at a distance from the hazard such that hazardous motion (or situation) is prevented, completed or stopped before the individual can be harmed.

Devices that require location at a safety distance include, but are not limited to:

1. interlocked guards (non-locking);
2. two hand control devices;
3. two hand trip devices;
4. single control safeguarding devices;
5. electro-optical presence-sensing devices;
6. RF presence-sensing devices;
7. safety mat devices;
8. safety edge devices.

The first four devices protect individuals by positioning the individual at or beyond the safety distance before hazardous motion can be initiated, or by maintaining the individual's position at the safety distance after hazardous motion has been initiated. The remaining four devices protect individuals by detecting an individual entering (or their presence within) a hazard zone at or within the safety distance.

NOTE - Guards and movable barrier devices with various openings are located at a position away from the hazard zone based on the ability of the operator to reach through the opening. Figure D.9 is one method that may be used to locate guards.

The safety distance may be calculated using the following equation:

$Ds = K(T)$ Equation (1)

Where: Ds = the safety distance

K = the maximum speed that an individual can approach the hazard

T = the total time to stop hazardous motion which includes various factors as described below

The factor K is the speed constant and includes hand and body movements of an individual approaching a hazard zone. The following factors should be considered when determining K:

a) Hand and arm movement;

b) Twisting of the body or shoulder, or bending at the waist;

c) Walking or running.

One of the accepted values for K is the hand speed constant (it is usually considered as the horizontal motion of the hand and arm while seated). Its common value is 1.6 m/s (63 in/s) although other values (typically greater) are also used. The hand speed constant does not include other body movements,

which can affect the actual approach speed. Consideration of the above factors should be included when determining the speed constant for a given application.

The factor *T* is the total time that it takes for the hazardous motion to stop, or for the hazardous portion of the machine cycle to be completed. A power press may present a hazard during the closing portion of its cycle or a machining center may present a hazard during a tool change or while the tool is approaching the workpiece (trapping zone), but not present a hazard during the balance of the machine cycle.

T includes portions of time that vary by machine type and by the safeguarding device applied. The following affect the total stopping time:

a) Type of actuator;

I) Full revolution clutch, or machines that cannot be stopped during a machine cycle. See note 1.

II) Part revolution friction clutch, or machines that can be stopped at any point in the machine cycle or anywhere during the hazardous portion of the machine cycle. See note 2.

III) Braking mechanism. See note 3.

IV) Stopping capability of the motors and drive. See note 4.

b) Reaction time of valves. See note 5.

c) Reaction time of the machine control system. See note 6.

d) Reaction time of the safeguarding device, including its interface. See note 7.

e) Additional time required by the use of braking performance monitor. See note 8.

Note 1: Full revolution (pin) clutches have one or more engaging points within a rotation of the flywheel where the clutch can be engaged. Once engaged, the clutch completes a full revolution or cycle (stroke) before it is disengaged and brought to a stop. After the machine is tripped by the control system or mechanical treadle, pedal, hand controls or levers, the clutch typically engages after the flywheel rotates to the engaging position. Therefore, it is possible that the tripping device could have tripped the clutch just after the flywheel engaging point has passed and will not engage the clutch until the flywheel has rotated one full revolution. Assuming that the hazard exists during the closing portion of the cycle or stroke (provided that no hazards are generated during the opening portion), the time to stop hazardous motion could take up to one and a half times the time it takes the machine to complete one cycle (stroke). For clutches with only one engaging point the stopping time, *Ts*, is:

$$Ts = 1.5\ (Tmc) \qquad \text{Equation (2)}$$

Where: Tmc = the time it takes to complete a machine cycle (stroke)

Some clutches have multiple engaging points on the flywheel. Therefore, the clutch has more than one position where engagement can occur. The equation for calculation of this time, the stopping time Ts is:

$$Ts = (1/2 + 1/N)(Tmc) \qquad \text{Equation (3)}$$

Where: N = the number of engaging points on the flywheel

For machines that are tripped (or sequenced) to initiate the machine cycle, which in turn initiates immediate motion and which cannot be stopped until the completion of the machine cycle, the stopping time *Ts* is:

$$Ts = Thm \qquad \text{Equation (4)}$$

Where: *Thm* = the time, after initiation of motion, until hazardous motion is completed

Note 2: The stopping time, *Ts,* of part revolution clutch driven machines or machines that can be stopped at any point in the machine cycle or stopped anywhere during the hazardous portion of the machine cycle is equal to the time it takes to stop hazardous motion (see also, Note 3). If eddy current or other electromagnetic clutches are used, see Note 4.

Note 3: The stopping time, *Ts*, is the time it takes to disengage the clutch, the time it takes to apply the brake and the time it takes the brake to stop motion.

Note 4: The stopping time, *Ts*, for direct drive, motor driven machines utilizing full voltage motors, servo systems, vector systems or other variable speed systems, is equal to the time it takes to stop hazardous motion after a stop command or signal is given to the motor contactor or drive system. This time should take into consideration both uncontrolled stops (category 0) and controlled stops (categories 1 and 2) including dynamic braking. See ANSI / NFPA 79.

Note 5: The stopping time, *Ts*, of machines actuated or controlled by pneumatic or hydraulic valves must include the reaction time of the valve measured from the time that the valve is de-energized until motion is stopped. Stopping time for systems using valves may be affected by high or low supply pressures, exhaust restrictions, sluggish spools or poppets or performance of the pilot sections.

Note 6: Control systems inherently have a delay from the time its inputs or the system logic initiate a stop command, until the system's output de-energizes the actuator. This time, Tc, is the reaction time of the control system.

Note 7: Safeguarding devices also have a delay from the time that they sense the presence, or absence (for hand controls and trips or hostage controls) of individuals. Additionally, there may be a delay caused by the interface between the device and the control system. The interface may, as an example, include interposing relays. The interface delay must be added to the total delay time. This time, *Tr*, is the reaction time of the device and its interface. The reaction time of the device, without the interface, is stated by the device manufacturer.

Note 8: Stopping performance monitors are used to assure that a gradual increase in the stopping time caused by the degradation of components does not exceed the stopping time used to calculate the safety distance for the safeguarding device. Stopping time at the end of a machine cycle is usually different than the stopping time during the hazardous portion(s) of the cycle, and since these times may vary due to such factors as machine temperature, tool loading and energy transferred to the workpiece, a factor, *Tspm*, must be added to the total stopping time.

Tspm is a calculated factor. As an example, if the monitor is set to a point or time 5% greater than the normal stopping position or time, then *Tspm* is equal to 5% of *Ts* ...

Therefore, the total stopping time is the sum of these factors and may be represented by the following equation:

$$T = Ts + Tc + Tr + Tspm \qquad \text{Equation (5)}$$

Stop time measuring devices are normally used to measure these times. When using these devices, *Ts* can be measured from the output of the control system until motion is stopped. Likewise, *Ts* + *Tc* can be measured from the input to the control system. Some stop time measuring devices include plungers and flags that are used to simulate operation by an individual. When using this type of device, it is possible to measure *Ts* + *Tc* + *Tr*. (Use the manufacturer's value for Tr, when provided).

Substituting *Ts* + *Tc* + *Tr* + *Tspm* for *T* in Equation 1, the equation for calculating the safety distance becomes:

$$Ds = K\,(Ts + Tc + Tr + Tspm) \qquad \text{Equation (6)}$$

An additional distance needs to be added to the safety distance when using electro-optical devices, safety mats, single control safety devices and RF devices.

Electro-optical and RF devices do not detect the presence of individuals at the plane or within the field of the device until an amount of penetration into the plane or field occurs. This amount is known as the distance (depth) penetration factor. The distance that must be added is called *Dpf*. See Figures D.1 -- D.6 and D.8.

When using safety mats and single control safety devices, it is possible for the individual to be reaching into the hazardous area or stepping onto the mat beyond its edge. The amount of reach or stride should be added to the safety distance and can be called *Dpf*. See Figures D.2 and D.6.

The equation for calculating the safety distance for these devices, therefore, is:

$$Ds = K\,(Ts + Tc + Tr + Tspm) + Dpf \qquad \text{Equation (7)}$$

Equation 7 can be used to calculate the safety distance for the eight safeguarding devices listed in paragraph 2 by substituting the non-zero values or combination of values as determined above.

NOTE ON THE FOLLOWING FIGURES: Figures D.1 through D.3 provide the reader with the means to find the value of *Dpf* they need to use in the safety distance formula. Figures D.4 through D.8 are examples per the different applications of how to use the safety distance formula once the reader has determined *Dpf.*

Figure D.1: Penetration factor, *Dpf*, for presence-sensing devices used in a vertical application with object sensitivity less than 64 mm (2.5 inches)

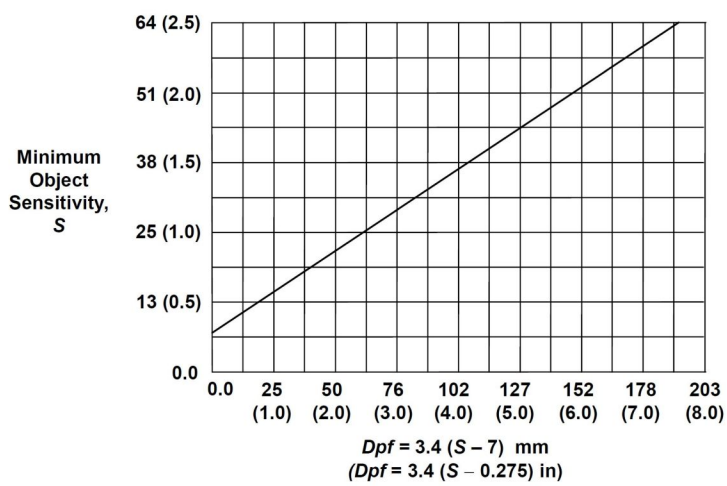

Dpf is the distance added to the safety distance due to the penetration factor that compensates for varying object sensitivities (resolution) of electro-optical presence-sensing devices.

When blanking is used and when the blanked area is not completely filled by the workpiece or part, or by mechanical guarding, the minimum object sensitivity can be calculated as:

Object sensitivity = size of the blanked area plus minimum object sensitivity without blanking.

Once this value is found, then *Dpf* can be determined.

If the entire blanked area is filled with mechanical guarding or other fixed material or guards, use the minimum object sensitivity to determine *Dpf*.

Figure D.2: Dpf for ground level devices that can be reached over (30° or less).
Examples include safety mats, area scanners, and horizontally mounted electro-optical devices.

Dpf = 1200mm (48 in) for horizontal sensing field applications without vertical sensing.

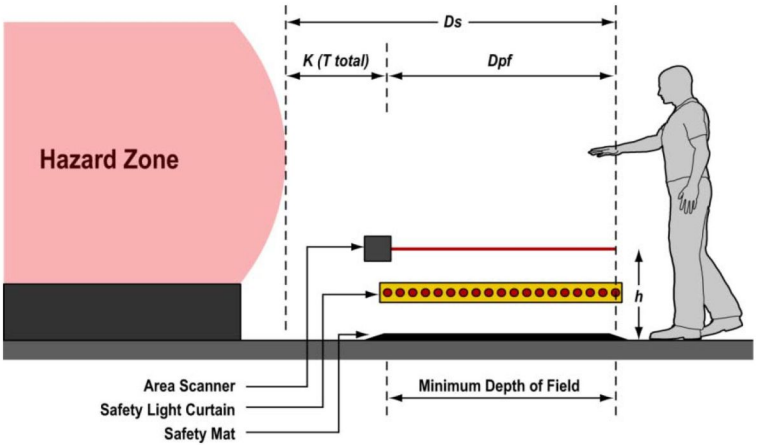

Allowable Sensing Field Heights in mm. (in)
Maximum Height 1000 (39)

Objects Sensitivity (*S*)	Minimum Height (*h*)
≤ 50 (2)	0
64 (2.5)	190 (7.5)
76 (3.0)	380 (15)
89 (3.5)	570(22.5)
102 (4.0)	760 (30)
108 (4.25)	860 (33.75)
117 (4.6)	1000 (39)

Minimum mounting height (*h*) can also be determined by the following,
$h = 15\ (S - 50)$ mm
$h = 15\ (S - 2)$ in
where *S* is the object sensitivity.

Minimum depth of field (or sensing area) must hinder an individual from stepping over the presence-sensing device or safety mat. This distance is 1.2 m (4 ft) if an individual can step over and pass unrestricted, 900 mm (3 ft) if supplemental safeguarding or physical barriers are used such that an individual must stand within the sensing area. Minimum depth of field addresses a different installation consideration than the Penetration Factor (*Dpf*).

Figure D.3: *Dpf* for object sensitivities greater than 64 mm (2.5 inches)

For electro-optical presence-sensing devices using large blanked areas, or if an individual can otherwise reach through or over the sensing field and not be detected, the distance between any two adjacent detection points shall not be greater than 600 mm (24 in), i.e., from one active point to the next active point above.

REACH-THROUGH
Dpf = 900 mm (36 in) for reach through applications.

If the individual cannot reach over the top of the sensing field and the bottom of the sensing field (~~A~~") is no more than 300 mm (1 ft) above the floor.

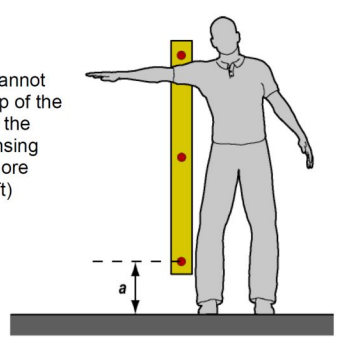

a **= Bottom of sensing field**

REACH-OVER
Dpf = 1200 mm (48 in) for reach over applications.

The top of the sensing field (~~B~~") is between 900 and 1200 mm (3 and 4 ft) above the floor. The bottom of the sensing field (~~A~~") is no more than 300 mm (1 ft) above the floor.

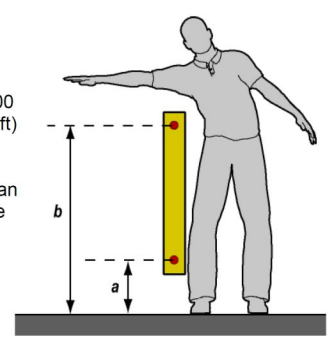

a **= Bottom of sensing field**
b **= Top of sensing field**

NOTE: An application is considered to be a ―reach-through‖ if the individual cannot reach over the top of the sensing field without being detected. A ―reach-over‖ application allows an individual to approach farther into the safeguarded area by binding at the waist thus requiring a larger Dpf to increase the separation between the hazard and the point of detection.

NOTE - Where individuals can place themselves between the safeguarding device and the hazard zone and remain undetected, additional measures must be taken.

Figure D.4: Example of guarding with object sensitivity less than 64 mm (2.5 inches)

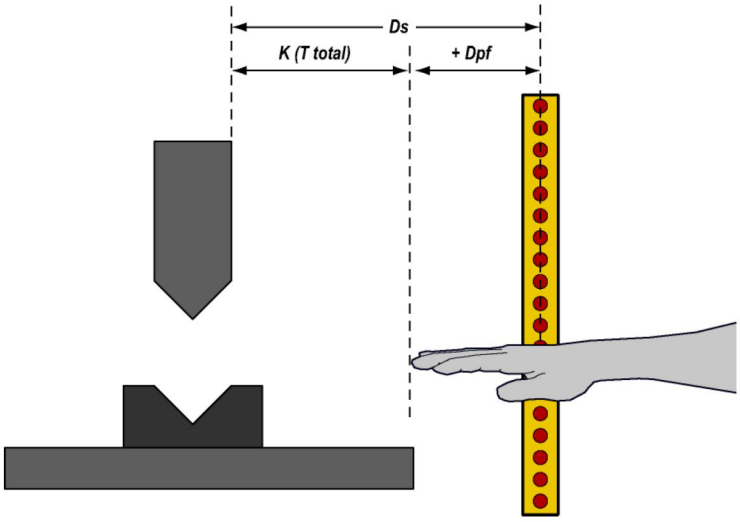

NOTE - Where individuals can place themselves between the safeguarding device and the hazard zone and remain undetected, additional measures must be taken.

Figure D.5: Example of guarding with various object sensitivities

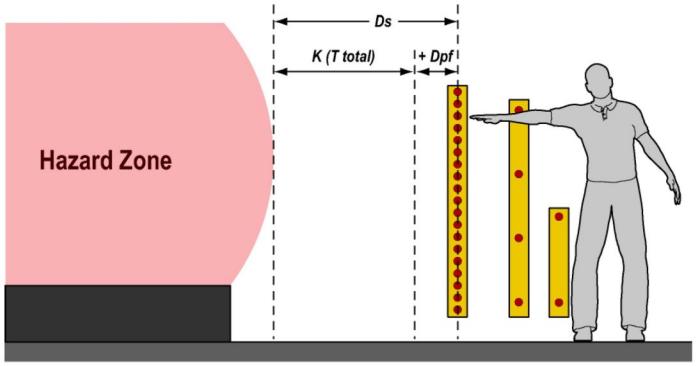

Safety Distance (Ds) for devices with a larger value for object sensitivity must be placed farther from the hazard than a device with a smaller value for object sensitivity.

Figure D.5: Example of guarding with various object sensitivities

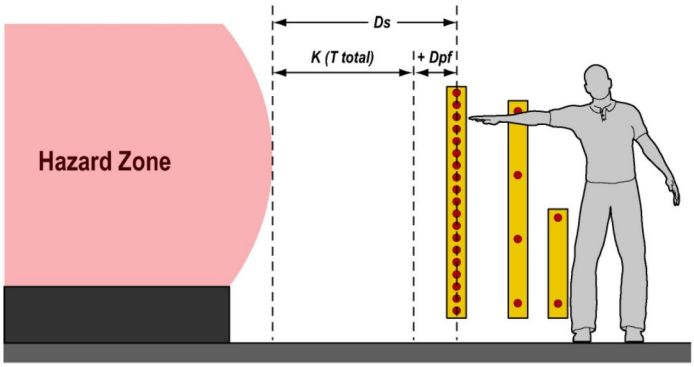

Safety Distance (Ds) for a Single Control Device includes a large Dpf of 2 meters (6.5 feet) due to the ability of the operator to stand between the device and reach towards the hazard.

Figure D.7: Two-hand Control & Two-Hand Trip Devices

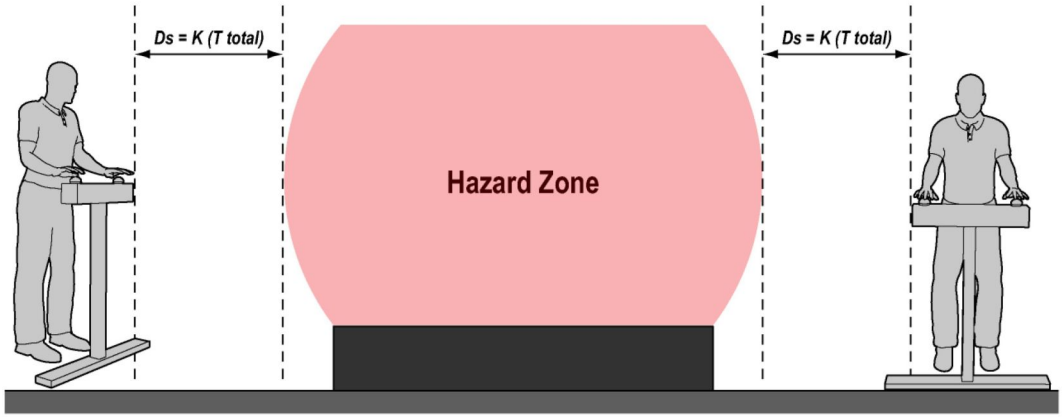

Safety Distance (*Ds*) for Two-Hand Control and Two-Hand Trip applications have a *Dpf* = 0. When used as a safeguarding device, the position must be placed such that the safety distance is measured from the closest hand control to the hazard.

Figure D.8: RF Presence-sensing Devices

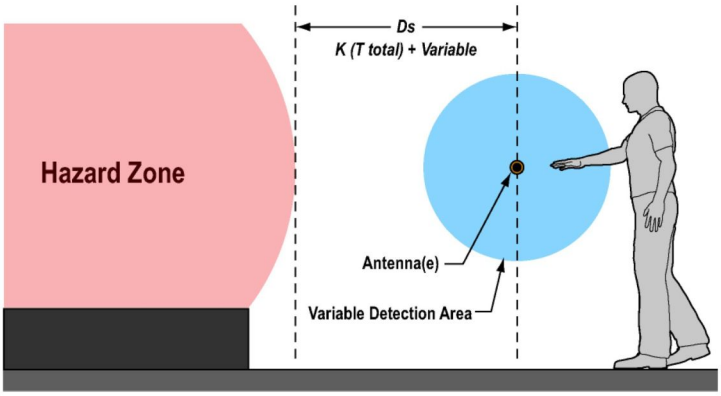

The point of detection must take into account fluctuations and variances in the field density and sensitivity due to environmental conditions and physical changes in the work area. This amount must be added to *K*(*T total*) to determine the total safety distance, *Ds*.

Figure D.9a: Location of Guards vs Slotted Openings; Distance from hazard in millimeters (inches)

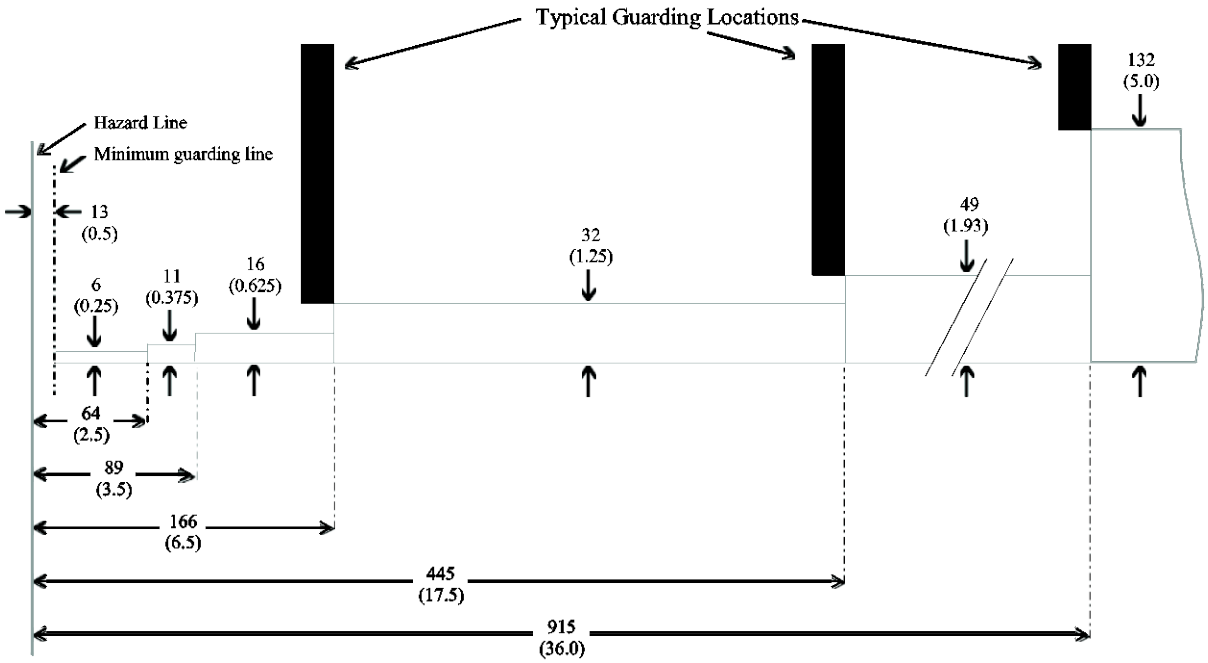

Maximum Guard slotted openings vs. Distance from Hazard Zone in millimeters (inches)

As a function of gap size				As a function of distance			
Known Gap		Minimum Distance		Known Distance		Maximum Gap	
0 – 6	(0 – 0.250)	13	(0.5)	< 13	(< 0.5)	Not permitted	
6.1 – 11	(0.251 – 0.375)	64	(2.5)	13 – 63.9	(0.5 – 2.49)	6	(0.25)
11.1 – 16	(0.376 – 0.625)	89	(3.5)	64 – 88.9	(2.5 – 3.49)	11	(0.375)
16.1 – 32	(0.626 – 1.250)	166	(6.5)	89 – 165.9	(3.5 – 6.49)	16	(0.625)
32.1 – 49	(1.251 – 1.875)	445	(17.5)	166 – 444.9	(6.5 – 17.49)	32	(1.25)
49.1 – 132	(1.876 – 5.0)	915	(36.0)	445 – 914.9	(17.5 – 35.99)	49	(1.875)
> 132	(> 5.0)	See Note below		≥ 915	(≥ 36.0)	See Note below	

NOTE: For guard openings greater than 132mm (5.0‖), a risk assessment must determine the appropriate distance from the hazard based on the guard design and human anthropometrics, or see Figure D-10 (reach over distance). These values are not intended to replace the Dpf values listed in Figures D.1, D.2 and D.3.

Based on data presented in Applied Ergonomics, Vol. 26, No 22, p.p. 141-145, A Review of Machine-Guarding Recommendations, Donald R. Vaillancourt & Stover H. Snook, The Liberty

Mutual Research Center for Safety and Health; and Standard Drawing 2063-2, ©1998 Liberty Mutual Group. Used with permission.

Figure D.9b: Location of Guards vs. Square Openings; Distance from hazard in millimeters (inches)

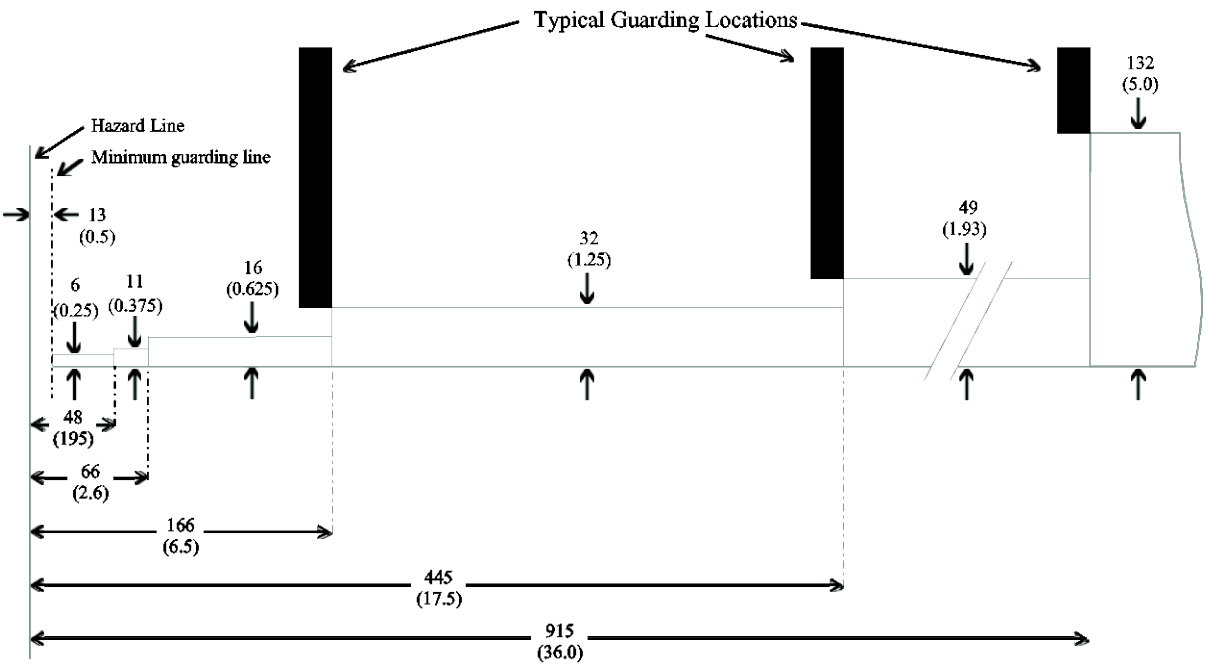

Maximum Guard square openings vs. Distance from Hazard Zone in millimeters (inches)

As a function of gap size				As a function of distance			
Known Gap		Minimum Distance		Known Distance		Maximum Gap	
0 – 6	(0 – 0.25)	13	(0.5)	< 13	(< 0.5)	Not permitted	
6.1 – 11	(0.25 – 0.375)	48	(1.95)	13 – 47.9	(0.5 – 1.88)	6	(0.25)
11.1 – 16	(0.376 – 0.625)	66	(2.6)	48 – 65.9	(1.89 – 2.59)	11	(0.375)
16.1 – 32	(0.626 – 1.25)	166	(6.5)	89 – 165.9	(3.5 – 6.53)	16	(0.625)
32.1 – 49	(1.25 – 1.93)	445	(17.5)	166 – 444.9	(6.54 – 17.49)	32	(1.25)
49.1 – 132	(1.93 – 5.0)	915	(36.0)	445 – 914.9	(17.5 – 35.99)	49	(1.875)
> 132	(> 5.0)	See Note below		≥ 915	(≥ 36.0)	See Note below	

NOTE: For guard openings greater than 132mm (5.0‖), a risk assessment must determine the appropriate distance from the hazard based on the guard design and human anthropometrics, or see Figure D-10 (reach over distance). These values are not intended to replace the Dpf values listed in Figures D.1, D.2 and D.3.

Based on data presented in Applied Ergonomics, Vol. 26, No 22, p.p. 141-145, A Review of Machine-Guarding Recommendations, Donald R. Vaillancourt & Stover H. Snook, The Liberty Mutual Research Center for Safety and Health; and Standard Drawing 2063-2, ©1998 Liberty Mutual Group. Used with permission.

Glossary

NOTICE

Cross-references to other glossary entries are shown in *italics.*

ANSI	Stands for American National Standards Institute, a U.S. clearinghouse and coordinating body for voluntary standards activity on the national level.
cascade	Two or three pairs of Shadow 9 optic heads connected in series.
CE	CE Mark, or CE marking as it is officially named, is an obligatory product mark for the European market, which indicates compliance "certification" according to the requirements formulated in the approximately 22 European "CE Marking Directives" and subsequent European standards.
control reliability	A regulation defined in ANSI B11.1-2009 and OSHA 1910.217 requiring that a single component failure in a clutch/brake control circuit not prevent the normal stopping action of the press, not create an unintended stroke, and not allow initiation of a subsequent stroke until the failure has been corrected.
CSA	Stands for Canadian Standards Association, an organization that develops standards and codes for Canada. There are several testing services firms, including UL, authorized to test products and certify to these standards. CSA itself also provides these services.
depth penetration factor	A value used in the ANSI formula for calculating the safety distance. The depth penetration factor is a measure of how far an object, like an operator's hand, can move through the light curtain before the light curtain reacts.
EDM	Stands for External Device Monitoring (EDM), a safety function that monitors the Shadow 9 interface to the guarded machine. EDM checks the interfacing relays to verify that they are responding correctly to the light curtain and that there is no inconsistency between the state of relays and that of the safety outputs. Also called Machine Primary Control Element (MPCE) monitoring.
emergency stop	A signal sent to the press in response to a malfunction that stops the press immediately.
first receiver first transmitter	The *first transmitter* or *first receiver* is the one connected to the WPC or the optional Shadow 9 control box, whether in a cascade or a standalone pair of heads.
hand speed constant	A value used in the ANSI formula for calculating the safety distance. The hand-speed constant is the distance one can theoretically move one's hand and arm in one second. OSHA recommends a hand-speed constant of 63 inches per second.

LED	Stands for light-emitting diode, a type of indicator whose state (illuminated, not illuminated, or blinking) provides information about the status of the light curtain.
ninety-degree stop time test	A test required to set the proper safety distance for personnel- guarding devices, including light curtains, two-hand controls, and type-B movable barriers. This test checks the stopping time of the press at its most critical stopping point, normally the midpoint of the downstroke (i.e., 90°), while the press is running in Continuous mode (or Single-stroke if the press does not have a selector setting for Continuous). Stopping time is a value required in the ANSI formula for calculating the safety distance.
object sensitivity	A value required in deriving the depth penetration factor for a light curtain. Object sensitivity specifies the smallest diameter object that a light curtain can detect anywhere in its field.
OSHA	Stands for Occupational Safety and Health Administration, a government agency that has established regulations for mechanical power presses, including presence-sensing devices for point-of- operation guarding.
OSSD	Stands for Output Signal Switching Device, a type of safety output. Shadow 9 has two OSSD outputs that can be connected to the guarded machine's emergency stop circuit to stop the machine whenever the light curtain is obstructed.
pinch point	The hazardous area between the upper and lower die from which OSHA mandates that the operator should be protected by installation of safety equipment such as light curtains, two-hand controls, and other barriers.
response time	The time it takes a machine control to activate the machine's brake.
safety distance	The distance from the pinch point that OSHA requires safety equipment such as light curtains, two-hand controls, and type-B movable barriers to be installed to assure the safety of the operator. The safety distance is calculated using a precise formula set by OSHA regulations and/or ANSI standards.
stopping time	See *ninety-degree stop time test*.
TÜV	A testing services firm providing international safety testing and certification services.
UL	Stands for Underwriters Laboratories, a testing services firm providing safety testing and certification services.

Index

REVISIONS			
REV	DESCRIPTION	DATE	APP'D

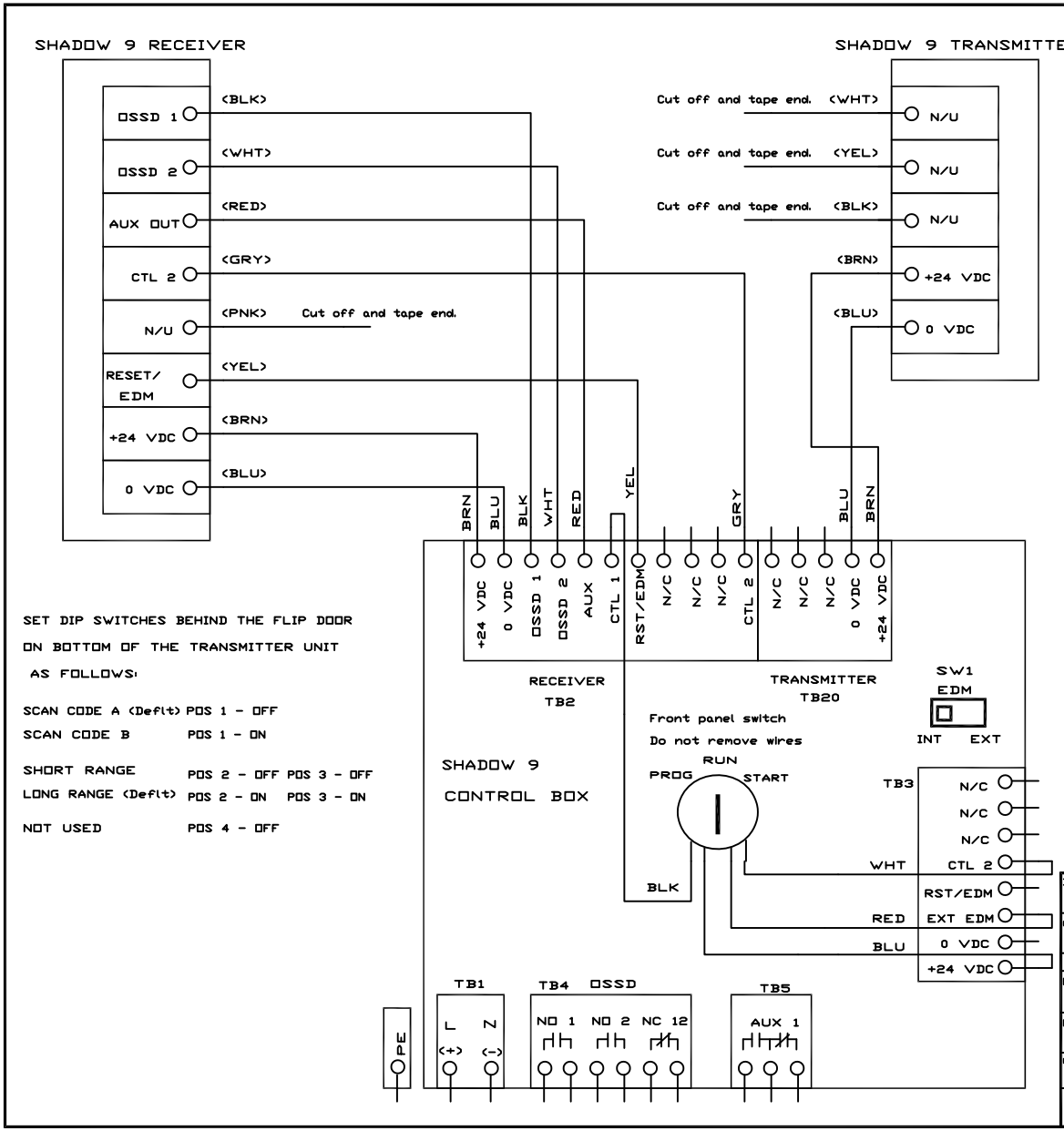

SET DIP SWITCHES BEHIND THE FLIP DOOR ON BOTTOM OF THE TRANSMITTER UNIT AS FOLLOWS:

SCAN CODE A (Deflt)	POS 1 - OFF	
SCAN CODE B	POS 1 - ON	
SHORT RANGE	POS 2 - OFF	POS 3 - OFF
LONG RANGE (Deflt)	POS 2 - ON	POS 3 - ON
NOT USED	POS 4 - OFF	

SET DIP SWITCHES SW1 AND SW2 BEHIND A FLIP DOOR ON BOTTOM OF THE RECEIVER UNIT AS FOLLOWS:

		SW1	SW2
SCAN CODE A (Deflt)	POS 1 -	OFF	OFF
SCAN CODE B	POS 1 -	ON	ON
EDM ENABLED (Deflt)	POS 2 -	ON	ON
EDM DISABLED	POS 2 -	OFF	OFF
AUTOMATIC START (Deflt)	POS 3 -	OFF	OFF
START/RESTART INTERLOCK	POS 3 -	ON	ON
NOT USED	POS 4 -	OFF	OFF
FIXED BLANKING ENABLED (Deflt)	POS 5 -	ON	ON
BLANKING DISABLED	POS 5 -	OFF	OFF
FLOATING BLANKING DISABLED (Deflt)	POS 6 -	OFF	OFF
FLOATING BLANKING ENABLED	POS 6 -	ON	ON
NOT USED	POS 7 -	OFF	OFF
NOT USED	POS 8 -	OFF	OFF

WARNING !!! - When the heads are connected to the control box make sure that the EDM is enabled. Turn on SW1 and SW2 position 2 DIP switches in the receiver unit.

DRAWN ADB	DATE 8/14/19	WINTRISS CONTROLS GROUP
CHK.		
APPROVALS		TITLE SHADOW 9 TX AND RX HEAD TO CONTROL BOX WIRING DIAGRAM
ENG.		
MFG.		
FILENAME		CODE IDENT NO. / SIZE B / DRAWING NUMBER FIGURE 1 / REV
REL		SCALE / SHEET OF

REVISIONS			
REV	DESCRIPTION	DATE	APP'D

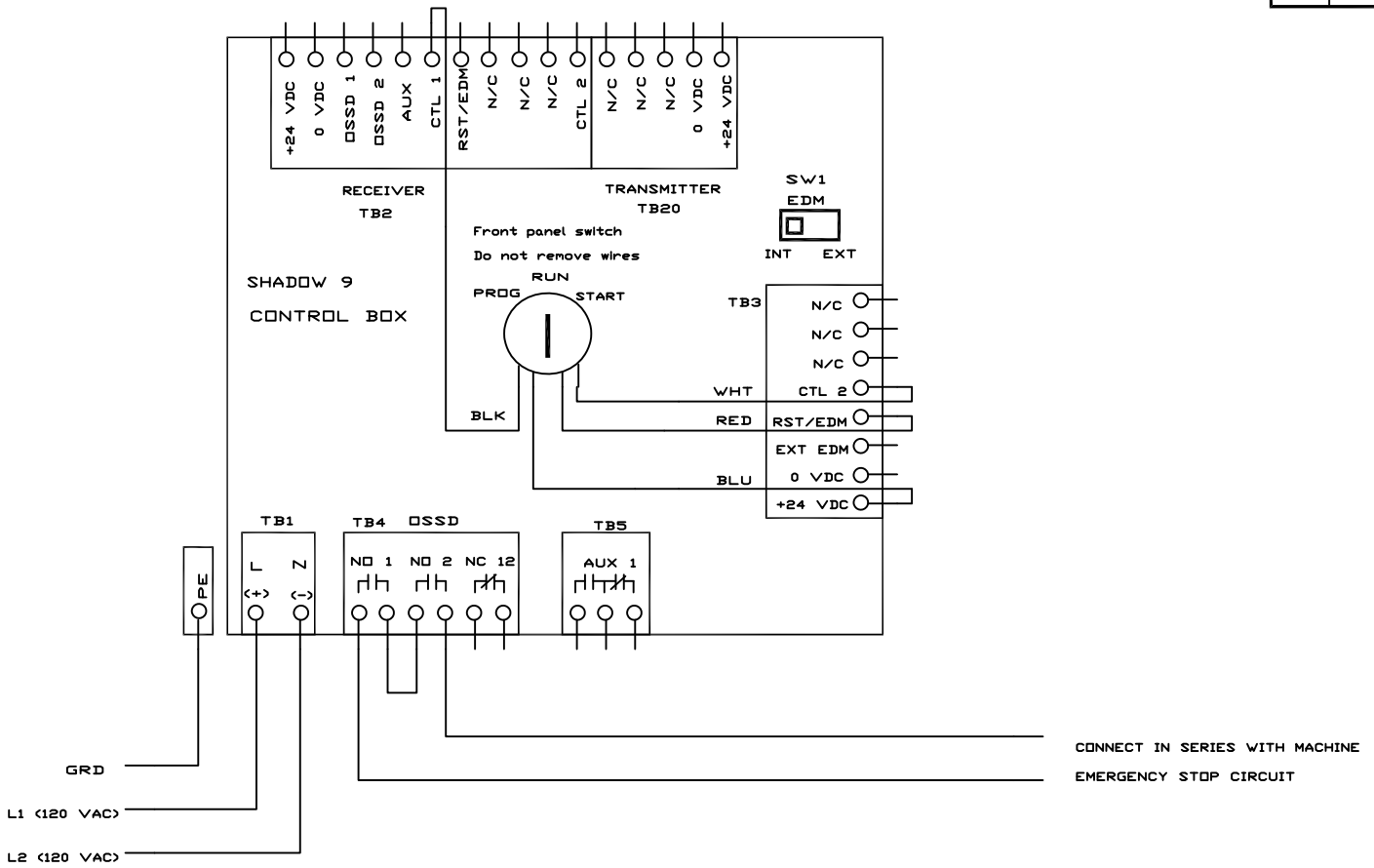

DRAWN ADB	DATE 8/15/19	WINTRISS CONTROLS GROUP	
CHK.			
APPROVALS		TITLE SHADOW 9 CONNECTION FOR SIMPLE N/O ESTOP CIRCUIT WIRING DIAGRAM	
ENG.			
MFG.			
FILENAME		CODE IDENT NO. / SIZE B / DRAWING NUMBER FIGURE 2	REV
REL		SCALE / SHEET OF	

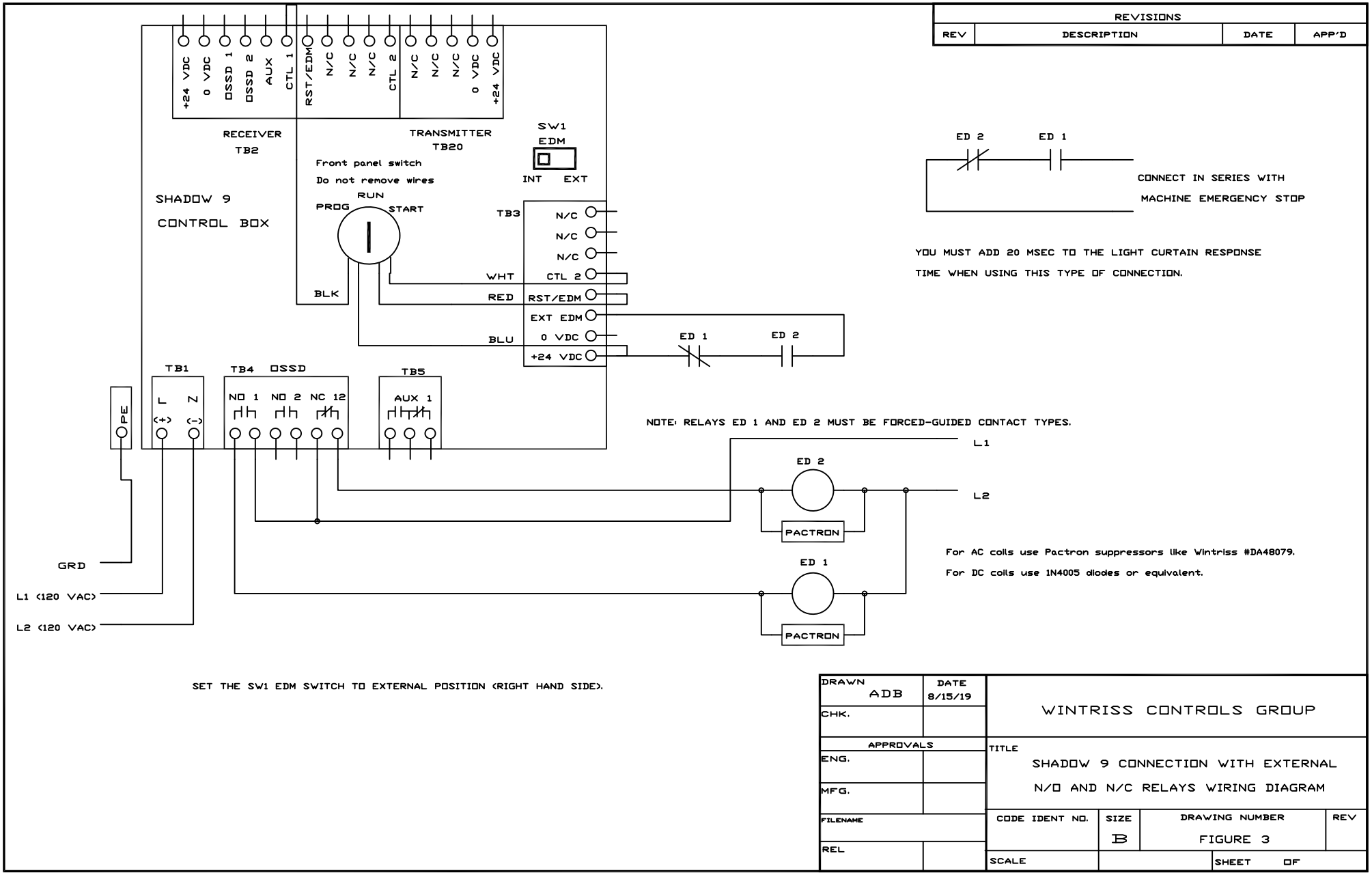
REVISIONS
REV
DESCRIPTION
DATE
APP'D
+24 VDC
0 VDC
OSSD 1
OSSD 2
AUX
CTL 1
RST/EDM
N/C
N/C
N/C
CTL 2
N/C
N/C
N/C
0 VDC
+24 VDC
RECEIVER
TB2
TRANSMITTER
TB20
SW1
EDM
INT
EXT
Front panel switch
Do not remove wires
SHADOW 9
CONTROL BOX
RUN
PROG
START
TB3
N/C
N/C
N/C
CTL 2
RST/EDM
EXT EDM
0 VDC
+24 VDC
WHT
RED
BLU
BLK
ED 2
ED 1
CONNECT IN SERIES WITH
MACHINE EMERGENCY STOP
YOU MUST ADD 20 MSEC TO THE LIGHT CURTAIN RESPONSE
TIME WHEN USING THIS TYPE OF CONNECTION.
ED 1
ED 2
TB1
TB4
OSSD
TB5
PE
L
N
(+)
(-)
NO 1
NO 2
NC 12
AUX 1
NOTE: RELAYS ED 1 AND ED 2 MUST BE FORCED-GUIDED CONTACT TYPES.
L1
L2
ED 2
PACTRON
ED 1
PACTRON
For AC coils use Pactron suppressors like Wintriss #DA48079.
For DC coils use 1N4005 diodes or equivalent.
GRD
L1 (120 VAC)
L2 (120 VAC)
SET THE SW1 EDM SWITCH TO EXTERNAL POSITION (RIGHT HAND SIDE).
DRAWN
ADB
DATE
8/15/19
CHK.
APPROVALS
ENG.
MFG.
FILENAME
REL
WINTRISS CONTROLS GROUP
TITLE
SHADOW 9 CONNECTION WITH EXTERNAL
N/O AND N/C RELAYS WIRING DIAGRAM
CODE IDENT NO.
SIZE
B
DRAWING NUMBER
FIGURE 3
REV
SCALE
SHEET
OF

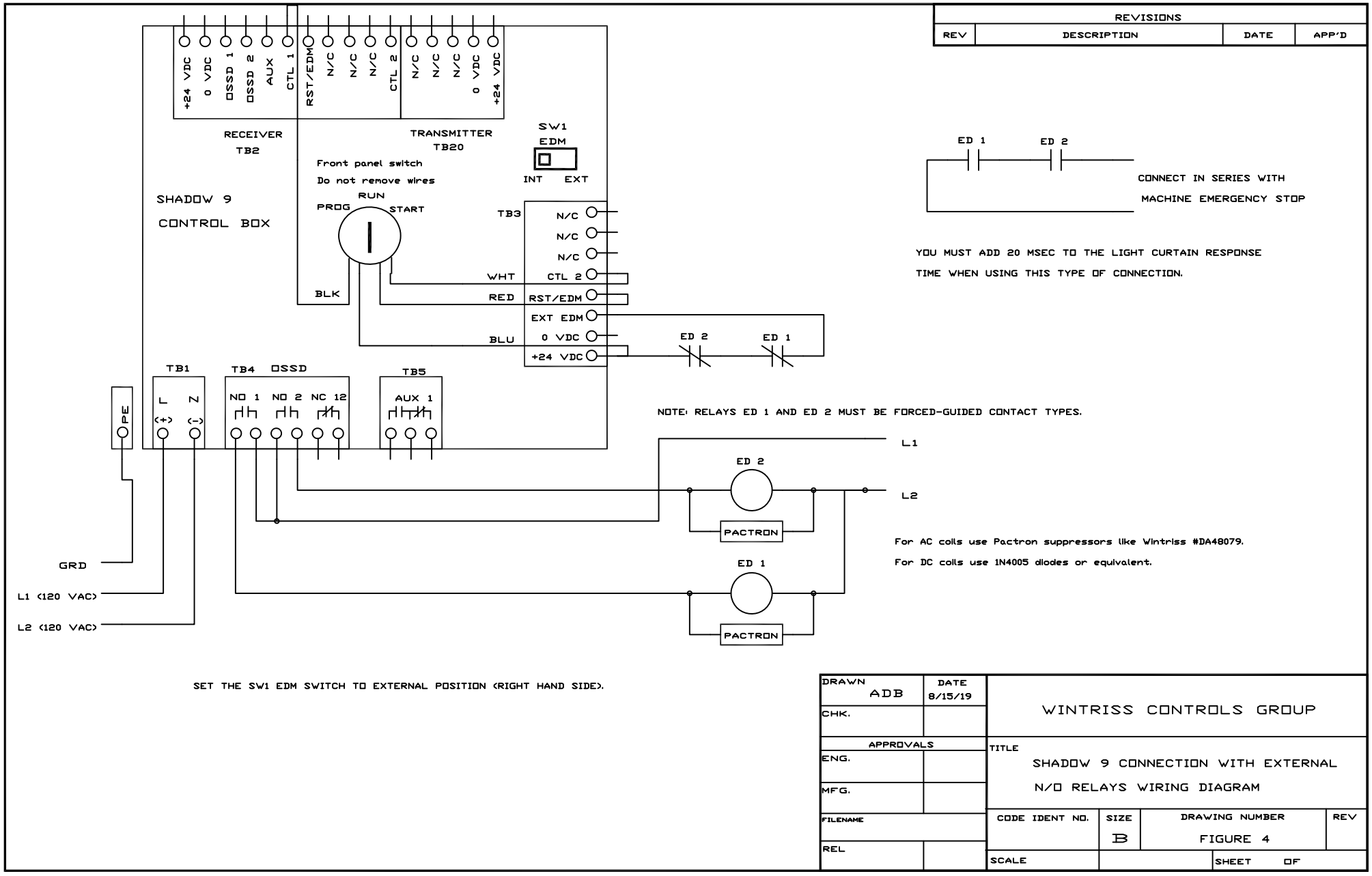
REVISIONS
REV
DESCRIPTION
DATE
APP'D
+24 VDC
0 VDC
OSSD 1
OSSD 2
AUX
CTL 1
RST/EDM
N/C
N/C
N/C
CTL 2
N/C
N/C
N/C
0 VDC
+24 VDC
RECEIVER
TB2
TRANSMITTER
TB20
SW1
EDM
INT
EXT
Front panel switch
Do not remove wires
SHADOW 9
CONTROL BOX
RUN
PROG
START
TB3
N/C
N/C
N/C
WHT
CTL 2
BLK
RED
RST/EDM
EXT EDM
BLU
0 VDC
+24 VDC
ED 2
ED 1
ED 1
ED 2
CONNECT IN SERIES WITH
MACHINE EMERGENCY STOP
YOU MUST ADD 20 MSEC TO THE LIGHT CURTAIN RESPONSE
TIME WHEN USING THIS TYPE OF CONNECTION.
TB1
TB4
OSSD
TB5
PE
L
N
(+)
(-)
NO 1
NO 2
NC 12
AUX 1
NOTE: RELAYS ED 1 AND ED 2 MUST BE FORCED-GUIDED CONTACT TYPES.
L1
L2
ED 2
PACTRON
ED 1
PACTRON
For AC coils use Pactron suppressors like Wintriss #DA48079.
For DC coils use 1N4005 diodes or equivalent.
GRD
L1 (120 VAC)
L2 (120 VAC)
SET THE SW1 EDM SWITCH TO EXTERNAL POSITION (RIGHT HAND SIDE).
DRAWN
ADB
DATE
8/15/19
CHK.
APPROVALS
ENG.
MFG.
FILENAME
REL
WINTRISS CONTROLS GROUP
TITLE
SHADOW 9 CONNECTION WITH EXTERNAL
N/O RELAYS WIRING DIAGRAM
CODE IDENT NO.
SIZE
B
DRAWING NUMBER
FIGURE 4
REV
SCALE
SHEET
OF

WARNING !!! - When the heads are connected to the control box make sure that the EDM is enabled. Turn on SW1 and SW2 position 2 DIP switches in the receiver unit.

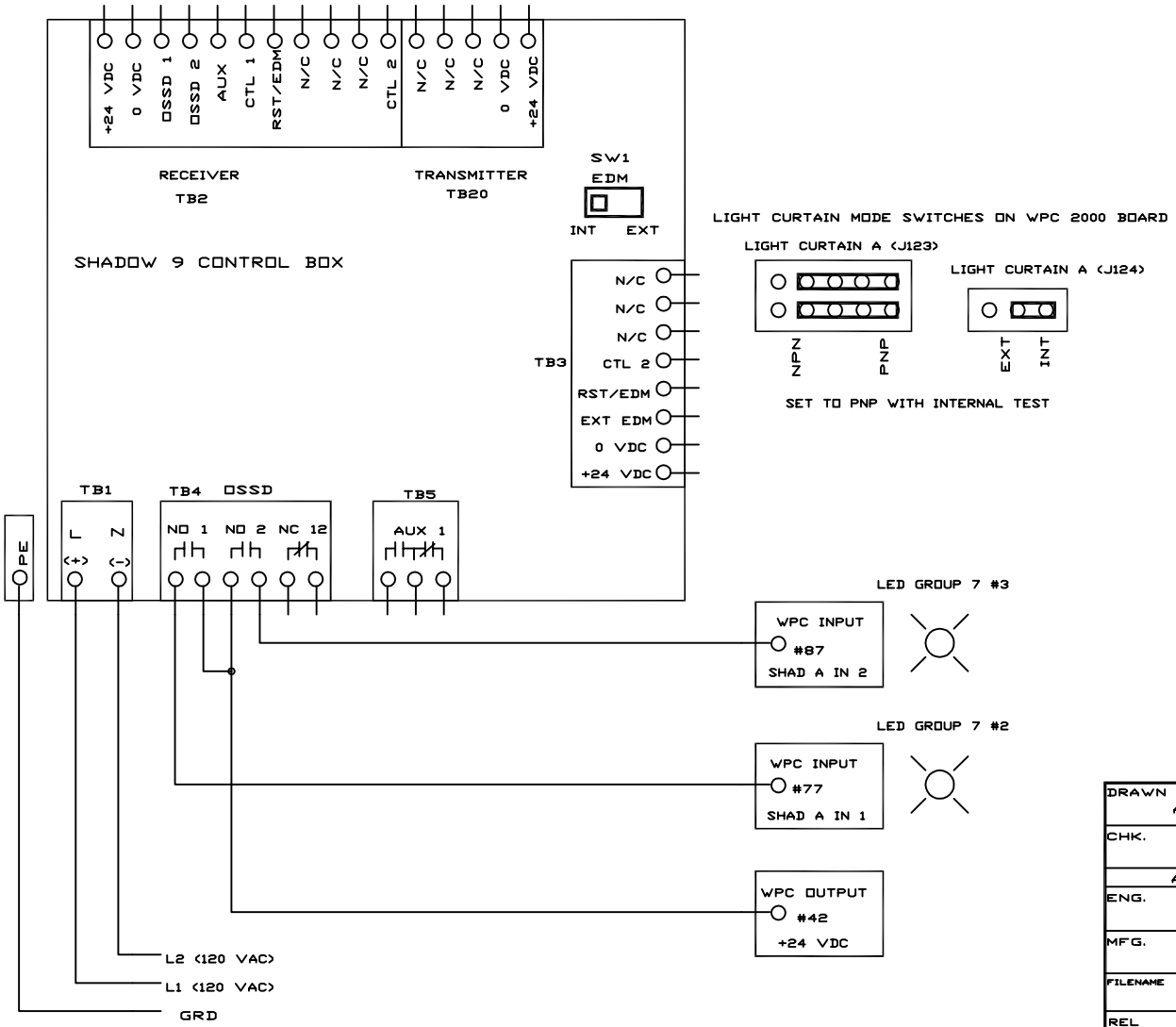

REVISIONS			
REV	DESCRIPTION	DATE	APP'D

SET DIP SWITCHES SW1 AND SW2 BEHIND A FLIP DOOR ON BOTTOM OF THE RECEIVER UNIT AS FOLLOWS:

		SW1	SW2
SCAN CODE A (Deflt)	POS 1 -	OFF	OFF
SCAN CODE B	POS 1 -	ON	ON
EDM ENABLED (Deflt)	POS 2 -	ON	ON
EDM DISABLED	POS 2 -	OFF	OFF
AUTOMATIC START (Deflt)	POS 3 -	OFF	OFF
START/RESTART INTERLOCK	POS 3 -	ON	ON
NOT USED	POS 4 -	OFF	OFF
FIXED BLANKING ENABLED (Deflt)	POS 5 -	ON	ON
BLANKING DISABLED	POS 5 -	OFF	OFF
FLOATING BLANKING DISABLED (Deflt)	POS 6 -	OFF	OFF
FLOATING BLANKING ENABLED	POS 6 -	ON	ON
NOT USED	POS 7 -	OFF	OFF
NOT USED	POS 8 -	OFF	OFF

SET DIP SWITCHES BEHIND THE FLIP DOOR ON BOTTOM OF THE TRANSMITTER UNIT AS FOLLOWS:

SCAN CODE A (Deflt)	POS 1 - OFF	
SCAN CODE B	POS 1 - ON	
SHORT RANGE	POS 2 - OFF	POS 3 - OFF
LONG RANGE (Deflt)	POS 2 - ON	POS 3 - ON
NOT USED	POS 4 - OFF	

DRAWN ADB	DATE 10/19/17	WINTRISS CONTROLS GROUP	
CHK.			
APPROVALS		TITLE WPC 2000 AND SHADOW 9 CONTROL BOX WIRING DIAGRAM	
ENG.			
MFG.			
FILENAME		CODE IDENT NO. / SIZE B / DRAWING NUMBER FIGURE 5	REV
REL		SCALE / SHEET OF	

WARNING !!! - When the heads are connected to the control box make sure that the EDM is enabled. Turn on SW1 and SW2 position 2 DIP switches in the receiver unit.

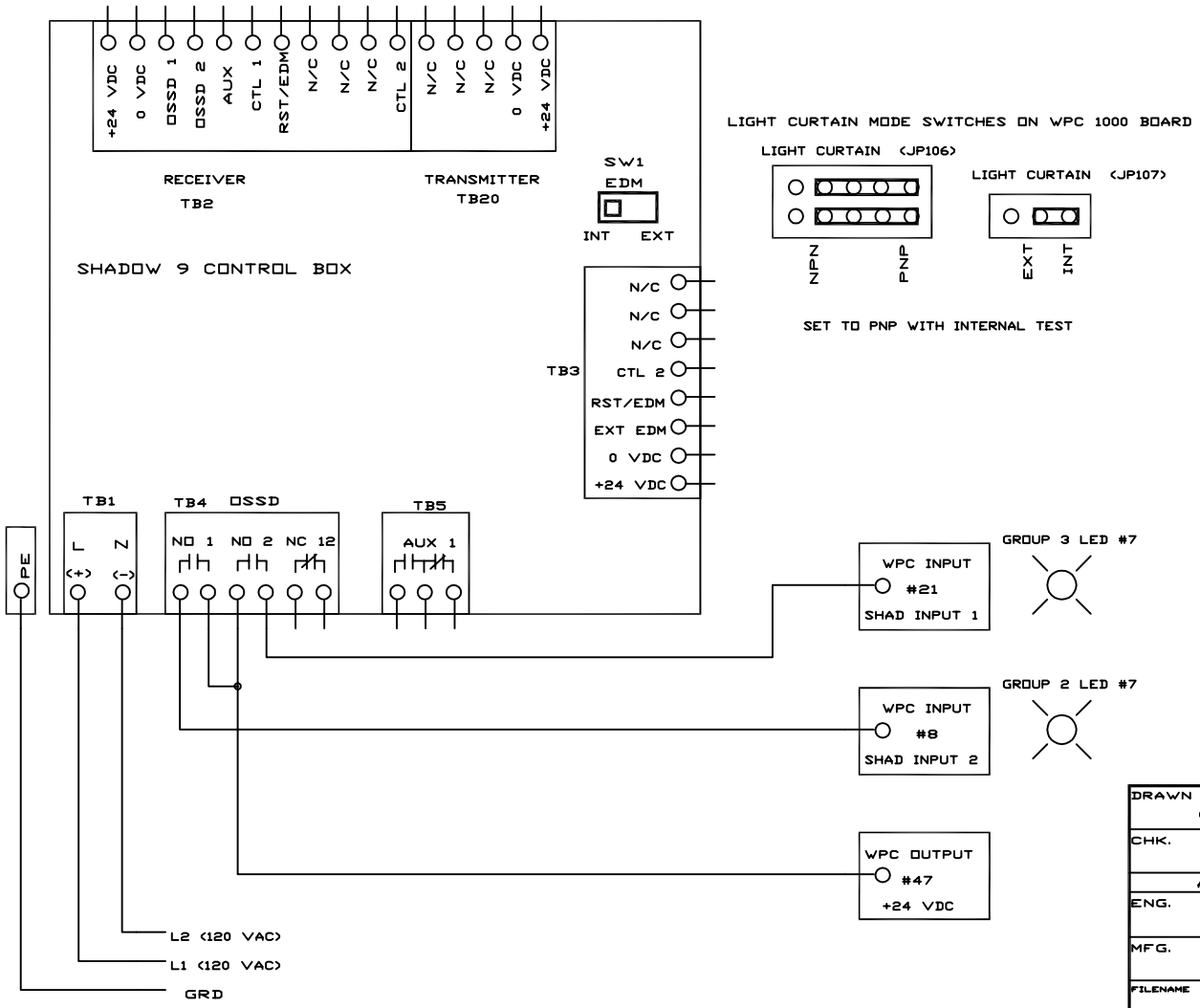

REVISIONS			
REV	DESCRIPTION	DATE	APP'D

SET DIP SWITCHES SW1 AND SW2 BEHIND A FLIP DOOR ON BOTTOM OF THE RECEIVER UNIT AS FOLLOWS:

		SW1	SW2
SCAN CODE A (Deflt)	POS 1 -	OFF	OFF
SCAN CODE B	POS 1 -	ON	ON
EDM ENABLED (Deflt)	POS 2 -	ON	ON
EDM DISABLED	POS 2 -	OFF	OFF
AUTOMATIC START (Deflt)	POS 3 -	OFF	OFF
START/RESTART INTERLOCK	POS 3 -	ON	ON
NOT USED	POS 4 -	OFF	OFF
FIXED BLANKING ENABLED (Deflt)	POS 5 -	ON	ON
BLANKING DISABLED	POS 5 -	OFF	OFF
FLOATING BLANKING DISABLED (Deflt)	POS 6 -	OFF	OFF
FLOATING BLANKING ENABLED	POS 6 -	ON	ON
NOT USED	POS 7 -	OFF	OFF
NOT USED	POS 8 -	OFF	OFF

SET DIP SWITCHES BEHIND THE FLIP DOOR ON BOTTOM OF THE TRANSMITTER UNIT AS FOLLOWS:

SCAN CODE A (Deflt)	POS 1 - OFF	
SCAN CODE B	POS 1 - ON	
SHORT RANGE	POS 2 - OFF	POS 3 - OFF
LONG RANGE (Deflt)	POS 2 - ON	POS 3 - ON
NOT USED	POS 4 - OFF	

DRAWN ADB	DATE 10/19/17	WINTRISS CONTROLS GROUP	
CHK.			
APPROVALS		TITLE WPC 1000 AND SHADOW 9 CONTROL BOX WIRING DIAGRAM	
ENG.			
MFG.			
FILENAME		CODE IDENT NO. / SIZE B / DRAWING NUMBER FIGURE 6	REV
REL		SCALE / SHEET OF	

WARNING !!! - When the heads are connected to the control box make sure that the EDM is enabled. Turn on SW1 and SW2 position 2 DIP switches in the receiver unit.

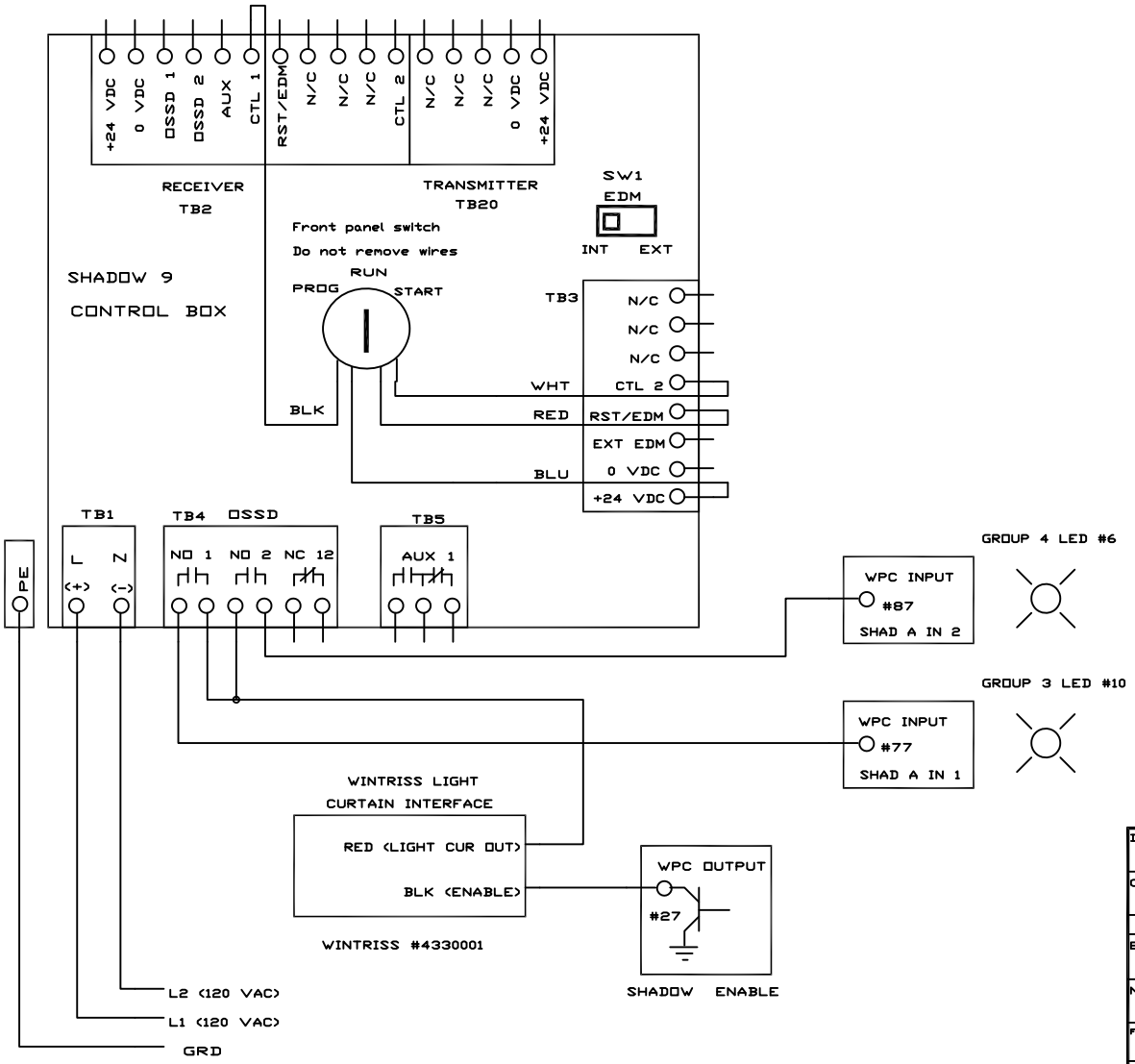

REVISIONS			
REV	DESCRIPTION	DATE	APP'D

SET DIP SWITCHES SW1 AND SW2 BEHIND A FLIP DOOR ON BOTTOM OF THE RECEIVER UNIT AS FOLLOWS:

		SW1	SW2
SCAN CODE A (Deflt)	POS 1 -	OFF	OFF
SCAN CODE B	POS 1 -	ON	ON
EDM ENABLED (Deflt)	POS 2 -	ON	ON
EDM DISABLED	POS 2 -	OFF	OFF
AUTOMATIC START (Deflt)	POS 3 -	OFF	OFF
START/RESTART INTERLOCK	POS 3 -	ON	ON
NOT USED	POS 4 -	OFF	OFF
FIXED BLANKING ENABLED (Deflt)	POS 5 -	ON	ON
BLANKING DISABLED	POS 5 -	OFF	OFF
FLOATING BLANKING DISABLED (Deflt)	POS 6 -	OFF	OFF
FLOATING BLANKING ENABLED	POS 6 -	ON	ON
NOT USED	POS 7 -	OFF	OFF
NOT USED	POS 8 -	OFF	OFF

SET DIP SWITCHES BEHIND THE FLIP DOOR ON BOTTOM OF THE TRANSMITTER UNIT AS FOLLOWS:

SCAN CODE A (Deflt)	POS 1 - OFF	
SCAN CODE B	POS 1 - ON	
SHORT RANGE	POS 2 - OFF	POS 3 - OFF
LONG RANGE (Deflt)	POS 2 - ON	POS 3 - ON
NOT USED	POS 4 - OFF	

DRAWN ADB	DATE 8/15/19	WINTRISS CONTROLS GROUP	
CHK.			
APPROVALS		TITLE WPC II AND SHADOW 9 WIRING DIAGRAM	
ENG.			
MFG.			
FILENAME		CODE IDENT NO. / SIZE B / DRAWING NUMBER FIGURE 7	REV
REL		SCALE / SHEET OF	

WARNING !!! - When the heads are connected to the control box make sure that the EDM is enabled. Turn on SW1 and SW2 position 2 DIP switches in the receiver unit.

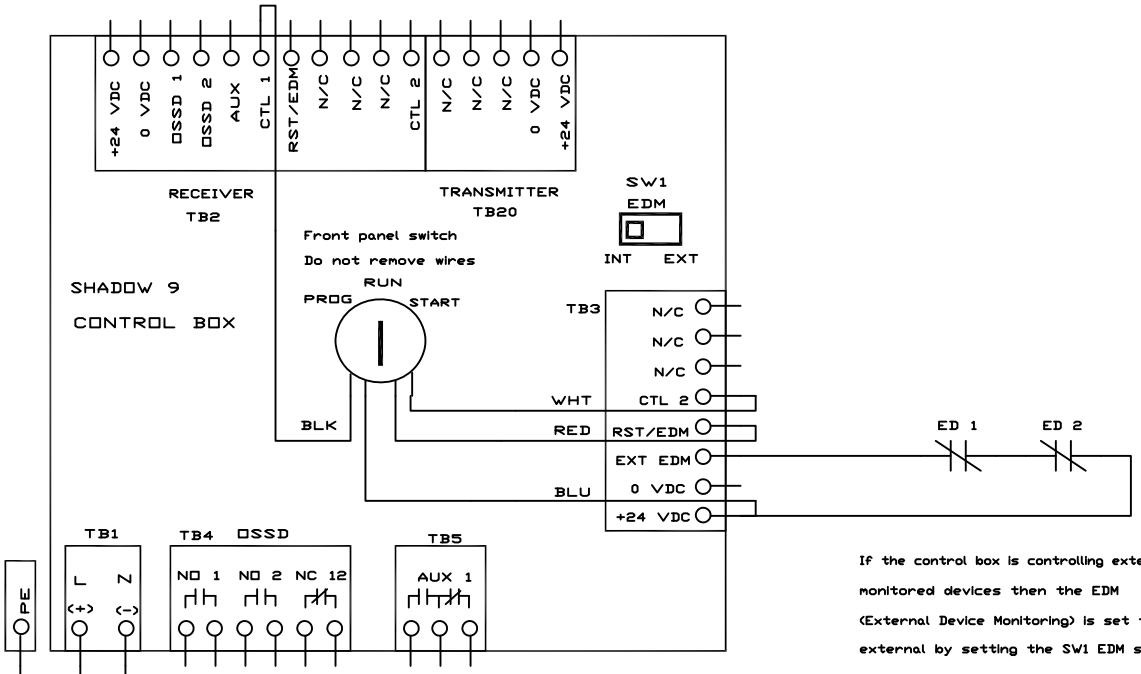

If the control box is controlling externally monitored devices then the EDM (External Device Monitoring) is set to external by setting the SW1 EDM switch to EXT.

Note: The NC output is wired in parallel with a NC contact in both OSSD relays. This means that the NC output will be closed if either OSSD relay is de-energized.

OSSD RELAYS:

Two NO and one NC force-guided contacts rated:
AC1: 250 VAC / 6A (resistive load)
DC1: 30 VDC / 6A (resistive load)
AC15: 240 VAC / 2A (inductive load)
DC13: 24 VDC / 1A (inductive load)

AUX 1 OUT RELAY:

One NO/NC contacts. 250VAC / 5A, 30VDC / 5A (resistive load); 250VAC / 2A, 30VDC / 3A (inductive load)

L2
L1
GRD

The AUX 1 NC contacts are closed and NO contacts are open when the OSSD outputs are on.
The AUX 1 NC contacts are open and NO contacts are closed when the OSSD outputs are off.

POWER REQ. 100 - 240 VAC 50-60 HZ
NOT MORE THAN .6/.4 AMPS

REVISIONS			
REV	DESCRIPTION	DATE	APP'D

SET DIP SWITCHES SW1 AND SW2 BEHIND A FLIP DOOR ON BOTTOM OF THE RECEIVER UNIT AS FOLLOWS:

		SW1	SW2
SCAN CODE A (Deflt)	POS 1 -	OFF	OFF
SCAN CODE B	POS 1 -	ON	ON
EDM ENABLED (Deflt)	POS 2 -	ON	ON
EDM DISABLED	POS 2 -	OFF	OFF
AUTOMATIC START (Deflt)	POS 3 -	OFF	OFF
START/RESTART INTERLOCK	POS 3 -	ON	ON
NOT USED	POS 4 -	OFF	OFF
FIXED BLANKING ENABLED (Deflt)	POS 5 -	ON	ON
BLANKING DISABLED	POS 5 -	OFF	OFF
FLOATING BLANKING DISABLED (Deflt)	POS 6 -	OFF	OFF
FLOATING BLANKING ENABLED	POS 6 -	ON	ON
NOT USED	POS 7 -	OFF	OFF
NOT USED	POS 8 -	OFF	OFF

SET DIP SWITCHES BEHIND THE FLIP DOOR ON BOTTOM OF THE TRANSMITTER UNIT AS FOLLOWS:

SCAN CODE A (Deflt)	POS 1 - OFF	
SCAN CODE B	POS 1 - ON	
SHORT RANGE	POS 2 - OFF	POS 3 - OFF
LONG RANGE (Deflt)	POS 2 - ON	POS 3 - ON
NOT USED	POS 4 - OFF	

DRAWN ADB	DATE 8/15/19	WINTRISS CONTROLS GROUP	
CHK.			
APPROVALS		TITLE SHADOW 9 OPTIONS AND WIRING DIAGRAM	
ENG.			
MFG.			
FILENAME		CODE IDENT NO. / SIZE B / DRAWING NUMBER FIGURE 8	REV
REL		SCALE / SHEET OF	

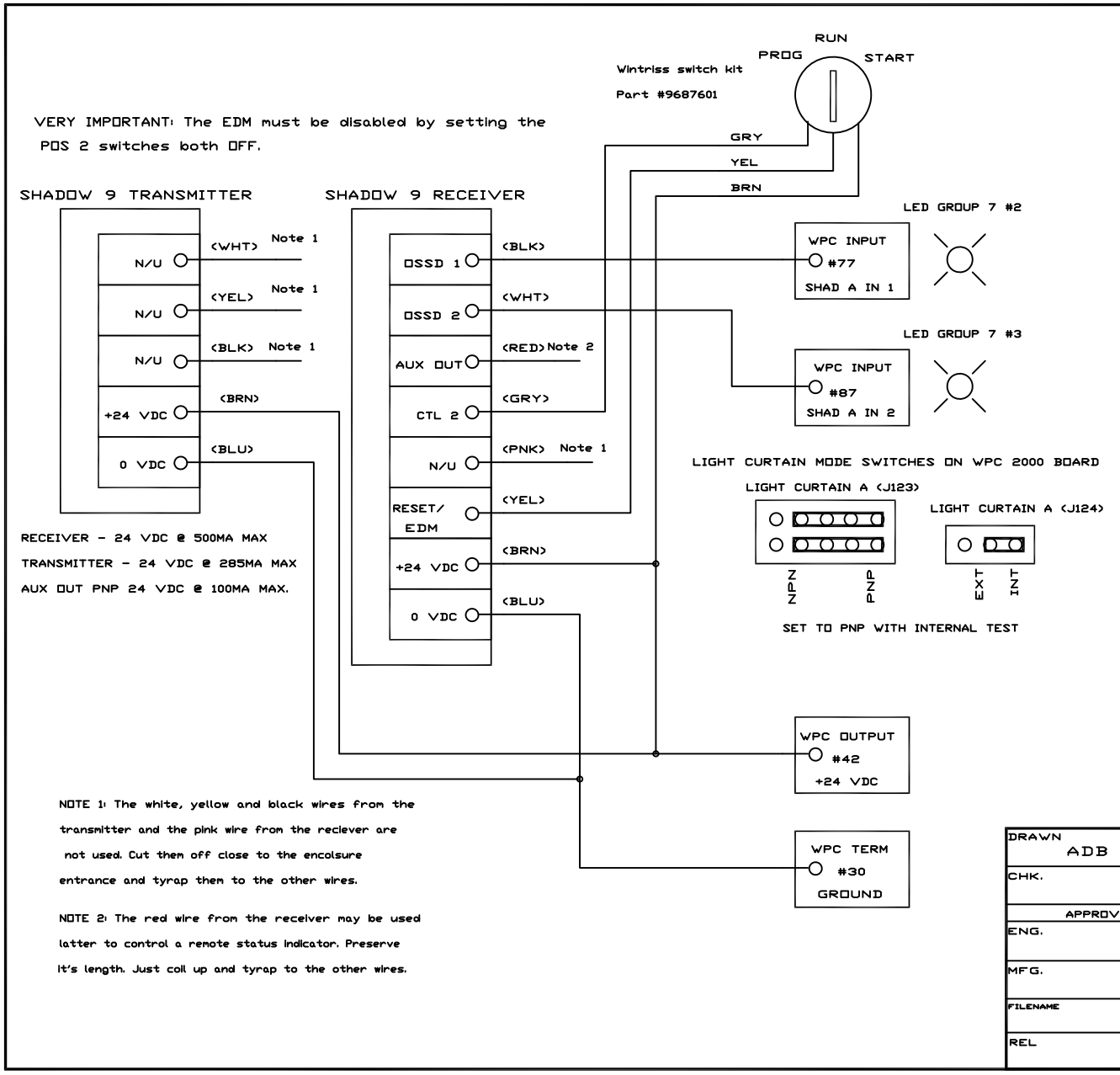

REVISIONS			
REV	DESCRIPTION	DATE	APP'D

SET DIP SWITCHES SW1 AND SW2 BEHIND A FLIP DOOR ON BOTTOM OF THE RECEIVER UNIT AS FOLLOWS:

		SW1	SW2
SCAN CODE A (Deflt)	POS 1 -	OFF	OFF
SCAN CODE B	POS 1 -	ON	ON
EDM ENABLED (Deflt)	POS 2 -	ON	ON
EDM DISABLED	POS 2 -	OFF	OFF
AUTOMATIC START (Deflt)	POS 3 -	OFF	OFF
START/RESTART INTERLOCK	POS 3 -	ON	ON
NOT USED	POS 4 -	OFF	OFF
FIXED BLANKING ENABLED (Deflt)	POS 5 -	ON	ON
BLANKING DISABLED	POS 5 -	OFF	OFF
FLOATING BLANKING DISABLED (Deflt)	POS 6 -	OFF	OFF
FLOATING BLANKING ENABLED	POS 6 -	ON	ON
NOT USED	POS 7 -	OFF	OFF
NOT USED	POS 8 -	OFF	OFF

SET DIP SWITCHES BEHIND THE FLIP DOOR ON BOTTOM OF THE TRANSMITTER UNIT AS FOLLOWS:

SCAN CODE A (Deflt)	POS 1 - OFF	
SCAN CODE B	POS 1 - ON	
SHORT RANGE	POS 2 - OFF	POS 3 - OFF
LONG RANGE (Deflt)	POS 2 - ON	POS 3 - ON
NOT USED	POS 4 - OFF	

DRAWN ADB	DATE 3/25/19	WINTRISS CONTROLS GROUP	
CHK.			
APPROVALS		TITLE WPC 2000 AND SHADOW 9 WIRING DIAGRAM	
ENG.			
MFG.			
FILENAME		CODE IDENT NO. / SIZE B / DRAWING NUMBER FIGURE 9	REV
REL		SCALE / SHEET OF	

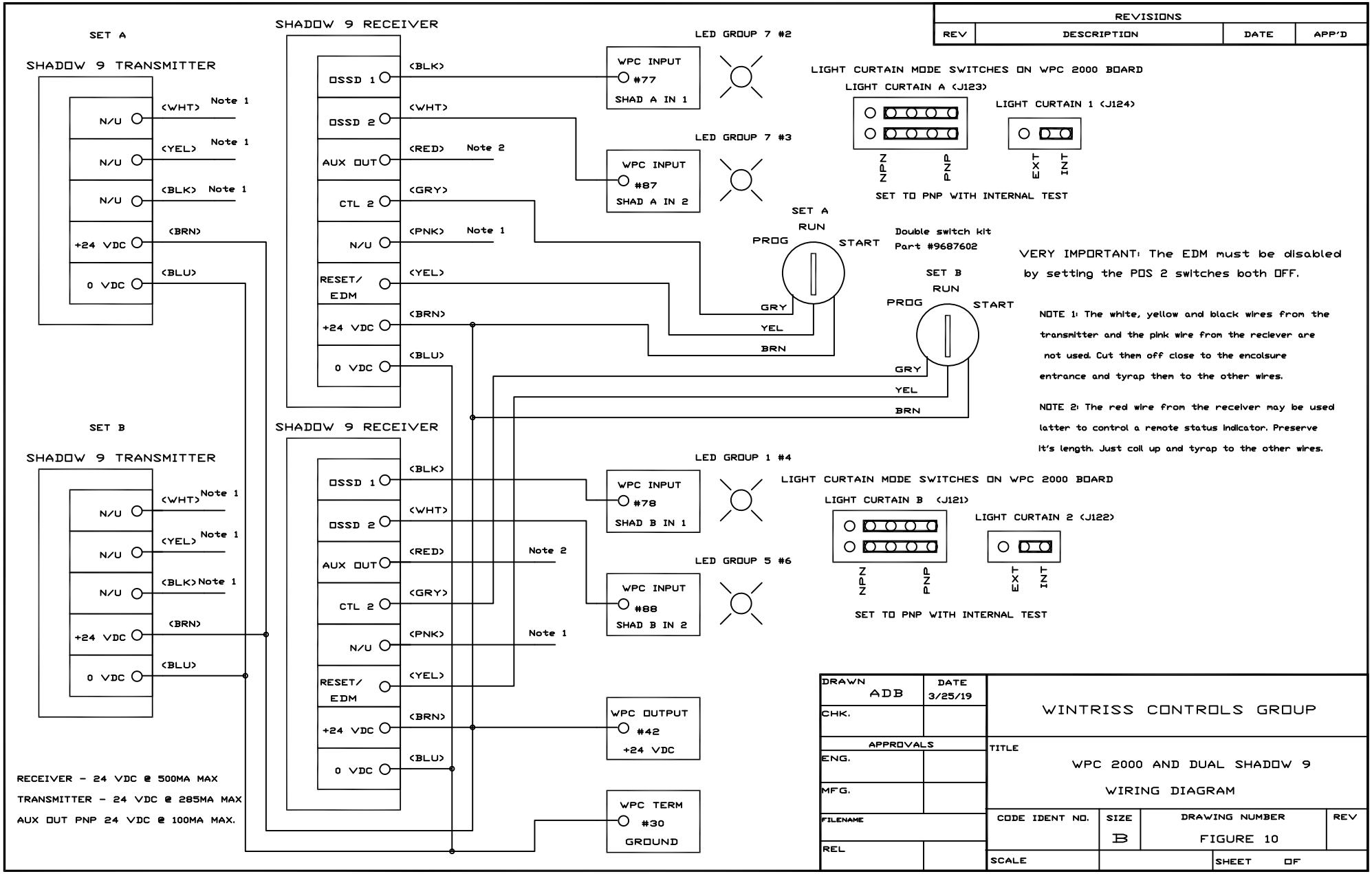
REVISIONS
REV
DESCRIPTION
DATE
APP'D
SET A
SHADOW 9 TRANSMITTER
N/U
N/U
N/U
+24 VDC
0 VDC
(WHT)
(YEL)
(BLK)
(BRN)
(BLU)
Note 1
SHADOW 9 RECEIVER
OSSD 1
OSSD 2
AUX OUT
CTL 2
N/U
RESET/ EDM
+24 VDC
0 VDC
(BLK)
(WHT)
(RED)
(GRY)
(PNK)
(YEL)
(BRN)
(BLU)
Note 2
LED GROUP 7 #2
WPC INPUT #77 SHAD A IN 1
LED GROUP 7 #3
WPC INPUT #87 SHAD A IN 2
LIGHT CURTAIN MODE SWITCHES ON WPC 2000 BOARD
LIGHT CURTAIN A (J123)
LIGHT CURTAIN 1 (J124)
ZPZ
PNP
EXT
INT
SET TO PNP WITH INTERNAL TEST
SET A
RUN
PROG
START
GRY
YEL
BRN
Double switch kit
Part #9687602
SET B
VERY IMPORTANT: The EDM must be disabled by setting the POS 2 switches both OFF.
NOTE 1: The white, yellow and black wires from the transmitter and the pink wire from the reciever are not used. Cut them off close to the encolsure entrance and tyrap them to the other wires.
NOTE 2: The red wire from the receiver may be used latter to control a remote status indicator. Preserve it's length. Just coil up and tyrap to the other wires.
SET B
SHADOW 9 TRANSMITTER
SHADOW 9 RECEIVER
LED GROUP 1 #4
WPC INPUT #78 SHAD B IN 1
LED GROUP 5 #6
WPC INPUT #88 SHAD B IN 2
LIGHT CURTAIN MODE SWITCHES ON WPC 2000 BOARD
LIGHT CURTAIN B (J121)
LIGHT CURTAIN 2 (J122)
SET TO PNP WITH INTERNAL TEST
WPC OUTPUT #42 +24 VDC
WPC TERM #30 GROUND
RECEIVER - 24 VDC @ 500MA MAX
TRANSMITTER - 24 VDC @ 285MA MAX
AUX OUT PNP 24 VDC @ 100MA MAX.
DRAWN ADB
DATE 3/25/19
CHK.
APPROVALS
ENG.
MFG.
FILENAME
REL
WINTRISS CONTROLS GROUP
TITLE
WPC 2000 AND DUAL SHADOW 9
WIRING DIAGRAM
CODE IDENT NO.
SIZE B
DRAWING NUMBER
FIGURE 10
REV
SCALE
SHEET OF

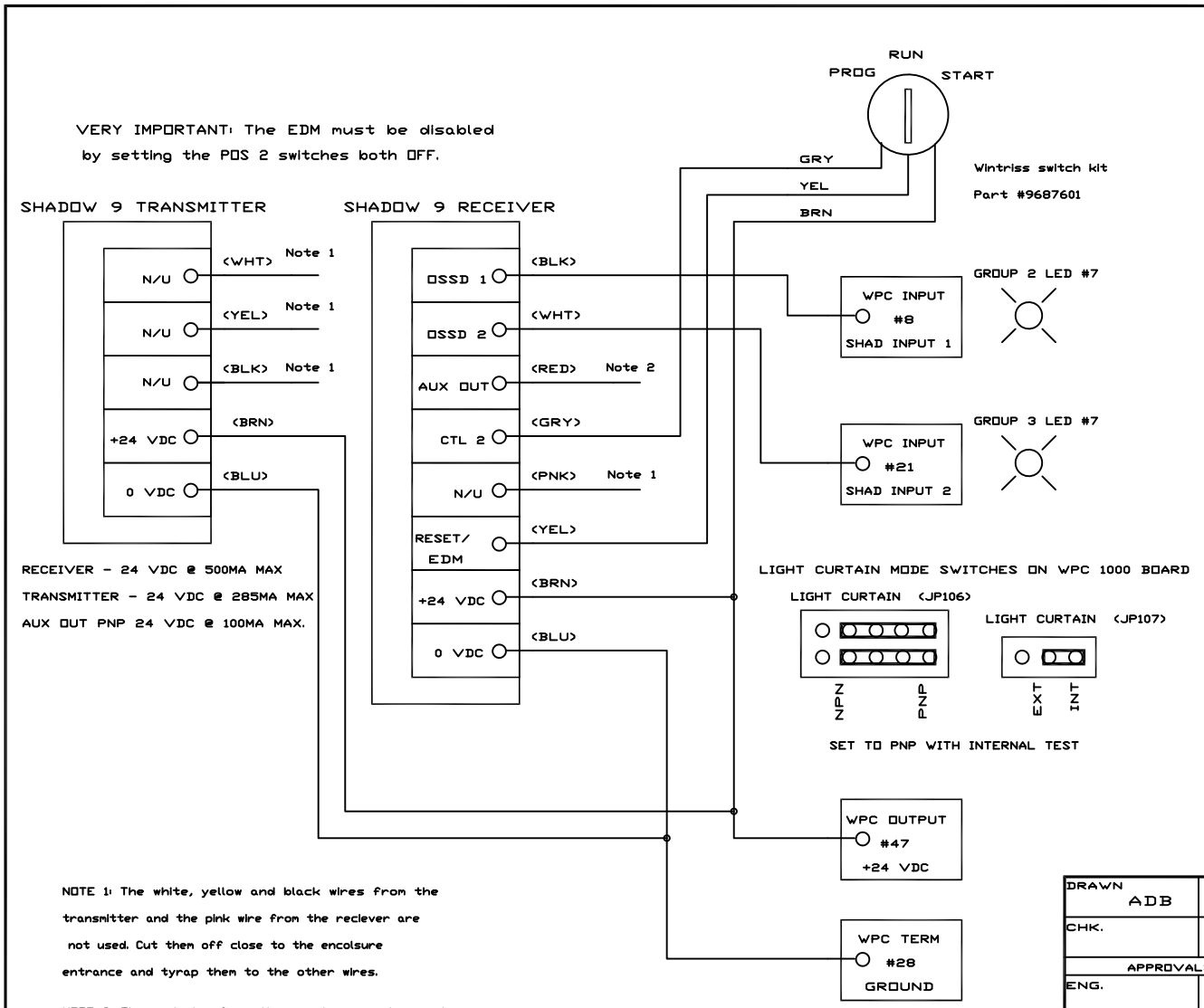

NOTE 1: The white, yellow and black wires from the transmitter and the pink wire from the reciever are not used. Cut them off close to the encolsure entrance and tyrap them to the other wires.

NOTE 2: The red wire from the receiver may be used latter to control a remote status indicator. Preserve it's length. Just coil up and tyrap to the other wires.

REVISIONS			
REV	DESCRIPTION	DATE	APP'D

SET DIP SWITCHES SW1 AND SW2 BEHIND A FLIP DOOR ON BOTTOM OF THE RECEIVER UNIT AS FOLLOWS:

		SW1	SW2
SCAN CODE A (Deflt)	POS 1 -	OFF	OFF
SCAN CODE B	POS 1 -	ON	ON
EDM ENABLED (Deflt)	POS 2 -	ON	ON
EDM DISABLED	POS 2 -	OFF	OFF
AUTOMATIC START (Deflt)	POS 3 -	OFF	OFF
START/RESTART INTERLOCK	POS 3 -	ON	ON
NOT USED	POS 4 -	OFF	OFF
FIXED BLANKING ENABLED (Deflt)	POS 5 -	ON	ON
BLANKING DISABLED	POS 5 -	OFF	OFF
FLOATING BLANKING DISABLED (Deflt)	POS 6 -	OFF	OFF
FLOATING BLANKING ENABLED	POS 6 -	ON	ON
NOT USED	POS 7 -	OFF	OFF
NOT USED	POS 8 -	OFF	OFF

SET DIP SWITCHES BEHIND THE FLIP DOOR ON BOTTOM OF THE TRANSMITTER UNIT AS FOLLOWS:

SCAN CODE A (Deflt)	POS 1 - OFF	
SCAN CODE B	POS 1 - ON	
SHORT RANGE	POS 2 - OFF	POS 3 - OFF
LONG RANGE (Deflt)	POS 2 - ON	POS 3 - ON
NOT USED	POS 4 - OFF	

DRAWN ADB	DATE 3/25/19	WINTRISS CONTROLS GROUP	
CHK.			
APPROVALS		TITLE WPC 1000 AND SHADOW 9 WIRING DIAGRAM	
ENG.			
MFG.			
FILENAME		CODE IDENT NO. / SIZE B / DRAWING NUMBER FIGURE 11	REV
REL		SCALE / SHEET OF	

NOTE 1: The white, yellow and black wires from the transmitter and the pink wire from the reciever are not used. Cut them off close to the encolsure entrance and tyrap them to the other wires.

REVISIONS			
REV	DESCRIPTION	DATE	APP'D

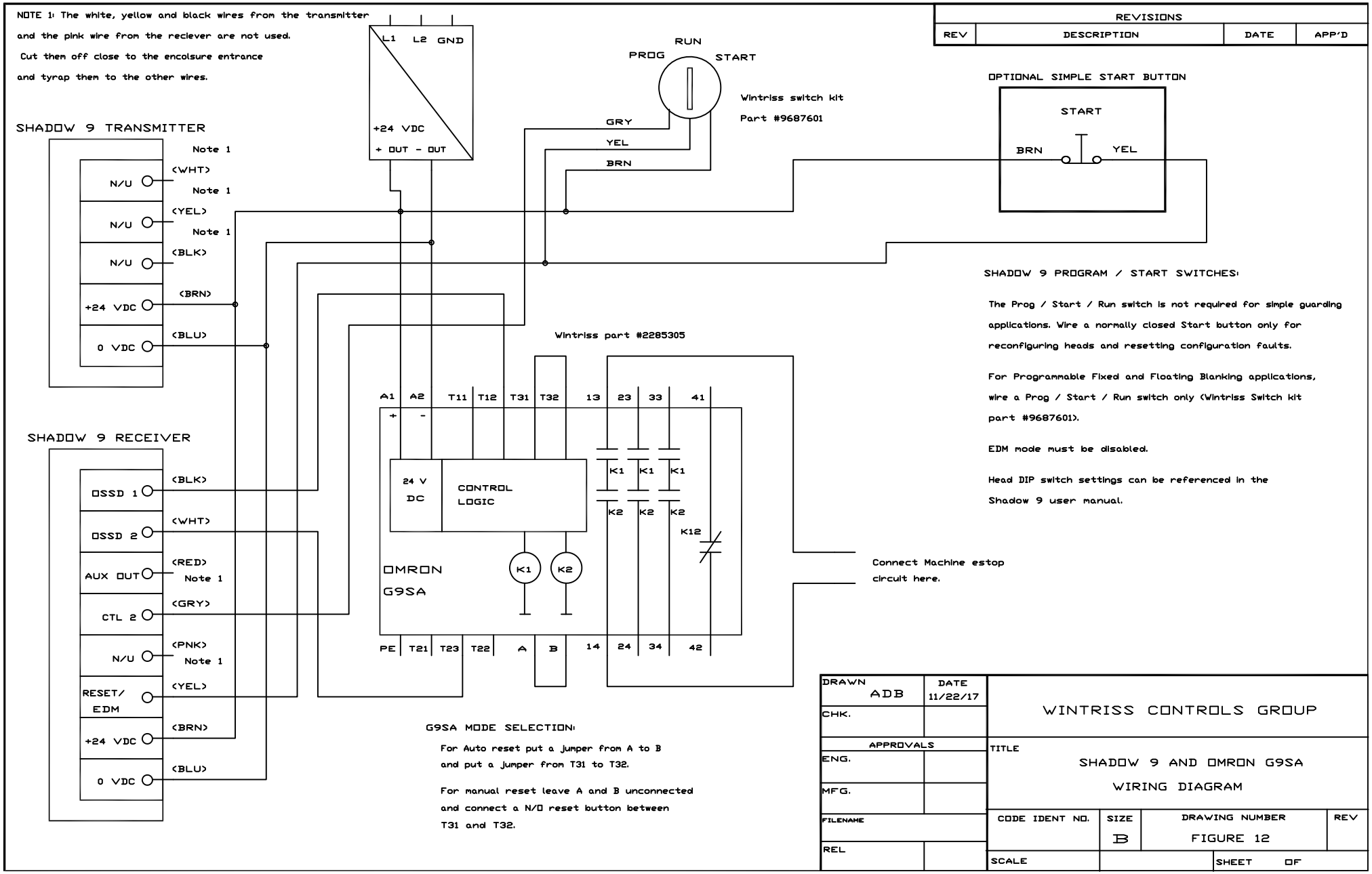

SHADOW 9 PROGRAM / START SWITCHES:

The Prog / Start / Run switch is not required for simple guarding applications. Wire a normally closed Start button only for reconfiguring heads and resetting configuration faults.

For Programmable Fixed and Floating Blanking applications, wire a Prog / Start / Run switch only (Wintriss Switch kit part #9687601).

EDM mode must be disabled.

Head DIP switch settings can be referenced in the Shadow 9 user manual.

G9SA MODE SELECTION:

For Auto reset put a jumper from A to B and put a jumper from T31 to T32.

For manual reset leave A and B unconnected and connect a N/O reset button between T31 and T32.

DRAWN ADB	DATE 11/22/17	WINTRISS CONTROLS GROUP
CHK.		
APPROVALS		TITLE SHADOW 9 AND OMRON G9SA WIRING DIAGRAM
ENG.		
MFG.		
FILENAME		CODE IDENT NO. / SIZE B / DRAWING NUMBER FIGURE 12 / REV
REL		SCALE / SHEET OF

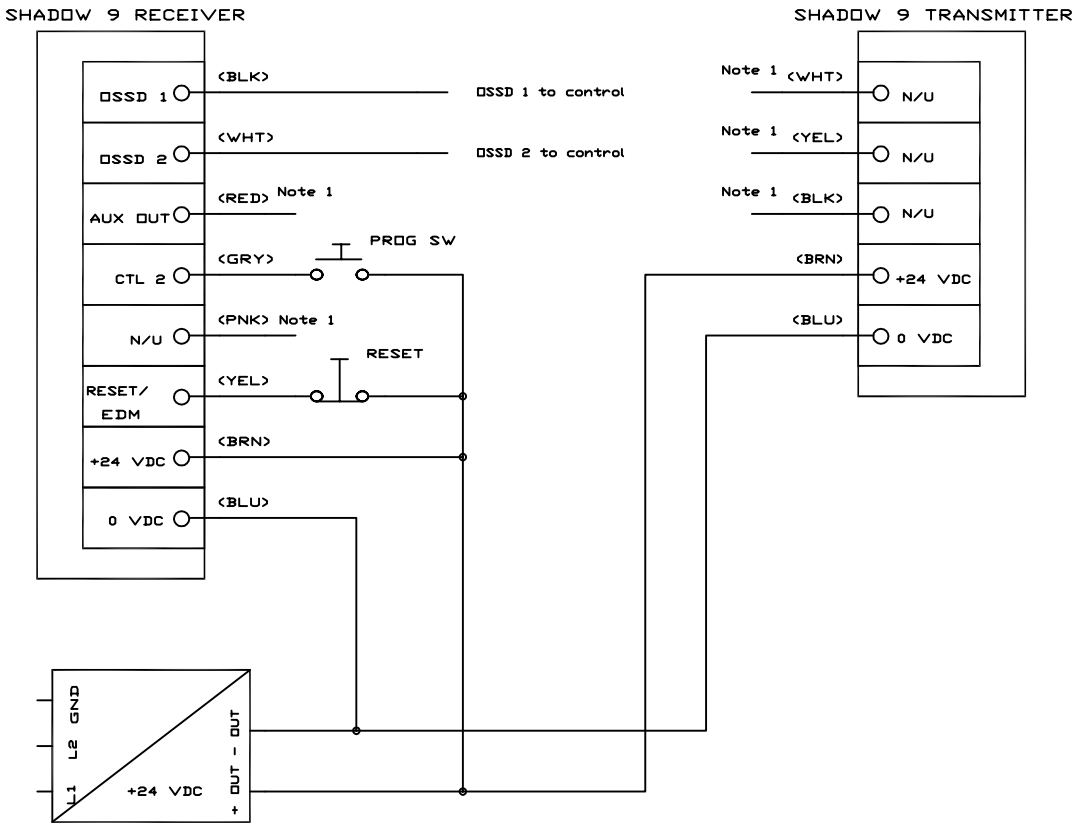

To Program: Press and hold the prog sw for 5 seconds until the CFG and BLANK LED's flash. Release the prog sw and then press again for less than 1 sec. and release. The BLANK LED should then come on steady and the CFG LED will flash. Press the reset sw for about 3 sec. and release. The unit should then turn on the outputs and show green.

NOTE 1: The white, yellow and black wires from the transmitter and the pink and red wire from the reciever are not used. Cut them off close to the encolsure entrance and tyrap them to the other wires.

REVISIONS			
REV	DESCRIPTION	DATE	APP'D

SET DIP SWITCHES SW1 AND SW2 BEHIND A FLIP DOOR ON BOTTOM OF THE RECEIVER UNIT AS FOLLOWS:

		SW1	SW2
SCAN CODE A (Deflt)	POS 1 -	OFF	OFF
SCAN CODE B	POS 1 -	ON	ON
EDM ENABLED (Deflt)	POS 2 -	ON	ON
EDM DISABLED	POS 2 -	OFF	OFF
AUTOMATIC START (Deflt)	POS 3 -	OFF	OFF
START/RESTART INTERLOCK	POS 3 -	ON	ON
NOT USED	POS 4 -	OFF	OFF
FIXED BLANKING ENABLED (Deflt)	POS 5 -	ON	ON
BLANKING DISABLED	POS 5 -	OFF	OFF
FLOATING BLANKING DISABLED (Deflt)	POS 6 -	OFF	OFF
FLOATING BLANKING ENABLED	POS 6 -	ON	ON
NOT USED	POS 7 -	OFF	OFF
NOT USED	POS 8 -	OFF	OFF

SET DIP SWITCHES BEHIND THE FLIP DOOR ON BOTTOM OF THE TRANSMITTER UNIT AS FOLLOWS:

SCAN CODE A (Deflt)	POS 1 - OFF	
SCAN CODE B	POS 1 - ON	
SHORT RANGE	POS 2 - OFF	POS 3 - OFF
LONG RANGE (Deflt)	POS 2 - ON	POS 3 - ON
NOT USED	POS 4 - OFF	

DRAWN ADB	DATE 10/17/17	WINTRISS CONTROLS GROUP
CHK.		
APPROVALS		TITLE SHADOW 9 TX AND RX BASIC HEAD WIRING DIAGRAM
ENG.		
MFG.		
FILENAME		CODE IDENT NO. / SIZE B / DRAWING NUMBER FIGURE 13 / REV
REL		SCALE / SHEET OF

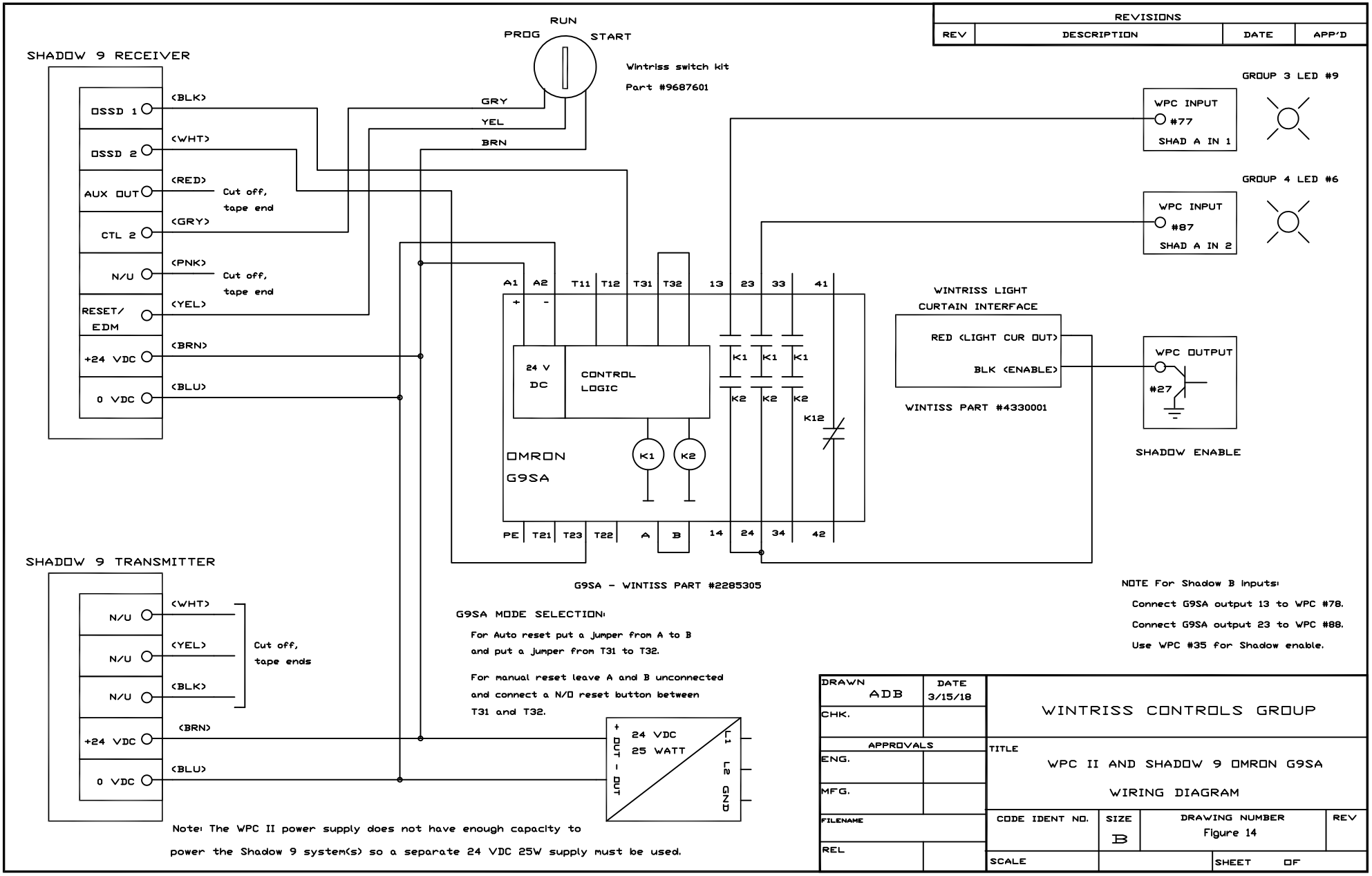
REVISIONS
REV
DESCRIPTION
DATE
APP'D
SHADOW 9 RECEIVER
OSSD 1
OSSD 2
AUX OUT
CTL 2
N/U
RESET/ EDM
+24 VDC
0 VDC
(BLK)
(WHT)
(RED)
(GRY)
(PNK)
(YEL)
(BRN)
(BLU)
Cut off, tape end
Cut off, tape end
RUN
PROG
START
GRY
YEL
BRN
Wintriss switch kit
Part #9687601
GROUP 3 LED #9
WPC INPUT
#77
SHAD A IN 1
GROUP 4 LED #6
WPC INPUT
#87
SHAD A IN 2
A1
A2
T11
T12
T31
T32
13
23
33
41
+
-
24 V DC
CONTROL LOGIC
K1
K2
K12
OMRON
G9SA
PE
T21
T23
T22
A
B
14
24
34
42
WINTRISS LIGHT CURTAIN INTERFACE
RED (LIGHT CUR OUT)
BLK (ENABLE)
WINTISS PART #4330001
WPC OUTPUT
#27
SHADOW ENABLE
G9SA - WINTISS PART #2285305
G9SA MODE SELECTION:
For Auto reset put a jumper from A to B and put a jumper from T31 to T32.
For manual reset leave A and B unconnected and connect a N/O reset button between T31 and T32.
NOTE For Shadow B inputs:
Connect G9SA output 13 to WPC #78.
Connect G9SA output 23 to WPC #88.
Use WPC #35 for Shadow enable.
SHADOW 9 TRANSMITTER
N/U
N/U
N/U
+24 VDC
0 VDC
(WHT)
(YEL)
(BLK)
(BRN)
(BLU)
Cut off, tape ends
+ OUT
- OUT
24 VDC
25 WATT
L1
L2
GND
Note: The WPC II power supply does not have enough capacity to power the Shadow 9 system(s) so a separate 24 VDC 25W supply must be used.
DRAWN
ADB
DATE
3/15/18
CHK.
APPROVALS
ENG.
MFG.
FILENAME
REL
WINTRISS CONTROLS GROUP
TITLE
WPC II AND SHADOW 9 OMRON G9SA
WIRING DIAGRAM
CODE IDENT NO.
SIZE
B
DRAWING NUMBER
Figure 14
REV
SCALE
SHEET
OF

REVISIONS			
REV	DESCRIPTION	DATE	APP'D

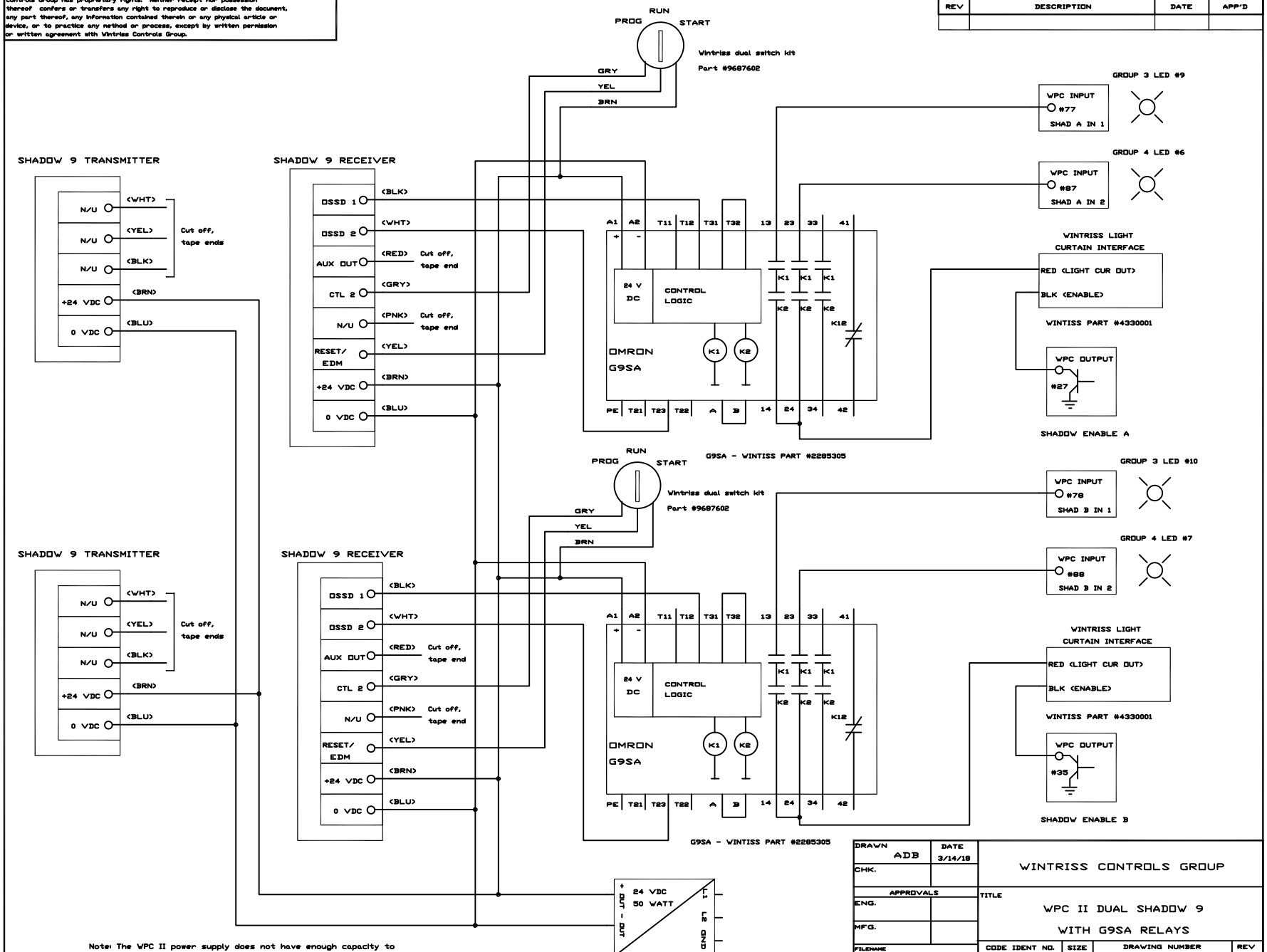

Note: The WPC II power supply does not have enough capacity to power the Shadow 9 systems so a separate 24 VDC 50W supply must be used.

DRAWN ADB	DATE 3/14/18	WINTRISS CONTROLS GROUP
CHK.		
APPROVALS		TITLE WPC II DUAL SHADOW 9 WITH G9SA RELAYS
ENG.		
MFG.		
FILENAME		CODE IDENT NO. / SIZE C / DRAWING NUMBER Figure 15 / REV
REL		SCALE NONE / SHEET OF

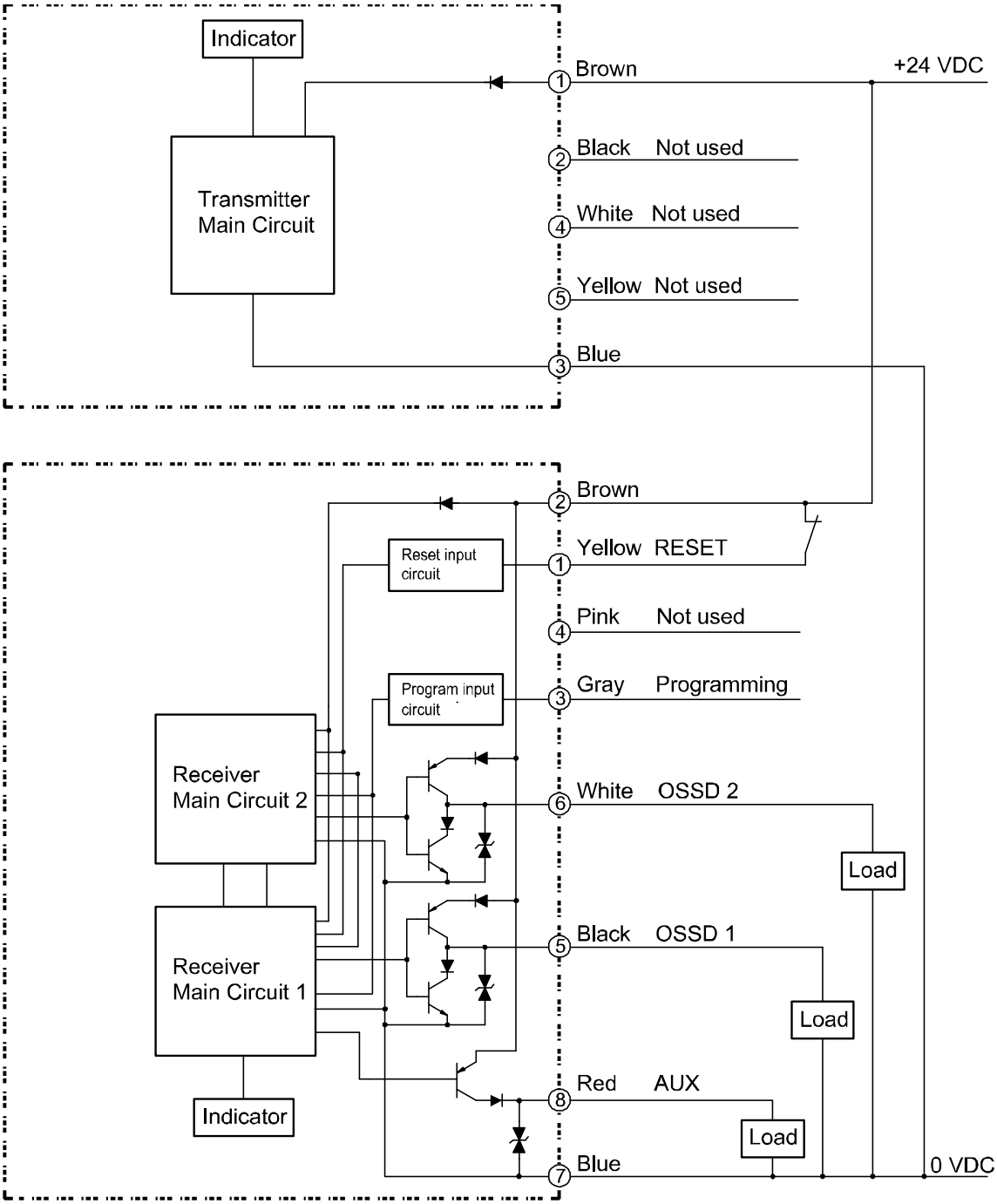

Figure 16. Shadow 9 PNP Circuit Diagram